International Journal of Advanced Information Science and Technology (IJAIST) ISSN: 2319:2682
Vol.6, No.7, July 2017 DOI:10.15693/ijaist/2017.v6i11.271-280

Strengh Properties of Geopolimer Concrete

P Avinash[1], C. Selin Ravikumar[2], and T.S. Thandavamoorthy[3]

[1]Assistant Professor, [2]Associate Professor, Department of Civil Engineering
[1, 2,] Samskruti College of Engineering and Technology, Hydrabad
[3]Professor, Adhiparasakthi Engineering College, Melmaruvathur
Email: selin.ravikumar@gmail.com

Abstract

In the recent development in civil engineering geopolymer is a binder like cement used to produce concrete to get sustainable durable concrete. The worldwide consumption of concrete is estimated to be about 8.8 billion tons per year. Due to the increase in infrastructural developments, the demand for concrete would increase in the future. The main objective of the study is to look into the shear behaviour of hybrid fibre reinforced geopolymer concrete beams. Test specimens of 1200 mm ×150 mm × 100 mm size were used for the study. A 20-30% of Fly ash by the mass was replaced by GGBS. The variable used were percentage of steel fibre by volume fraction, viz., 0.0%, 0.5%, and 1%, and basalt fibre volume fraction, viz., 0.0%, 0.15%,and 0.3%. The concentration of sodium hydroxide was 12 Molar and 14 Molar in geopolymer concrete. For curing, temperature was fixed as 60^0 C for 24 hours. The geopolymer specimens were cured by using steam curing chamber. The specimens were cured after the rest period of three days. A trail and error process was used to obtain proper mixture proportion for geopoymer concrete. The specimens were tested after the age of 7 days. The obtained results of Fly ash and GGBS -based hybrid fibre geopolymer concrete (F&GHGPC) specimens were compared with the only Fly ash-based hybrid fibre geopolymer concrete (FHGPC) specimens. Test results show that first crack load, ultimate load, energy absorption capacity, experimental shear strength and ductile characteristic of F&GHGPC geopolymer concrete specimens were higher than the FHGPC geopolymer concrete specimens

1. INTRODUCTION

In the present world scenario climate change due to global warming has become a major concern. The global warming is caused by the emission of greenhouse gases, such as carbon dioxide (CO_2), to the atmosphere by human activities. Among the greenhouse gases, CO_2 contributes about 65% of global warming. The cement industry is held responsible for some of the CO_2 emissions, because the production of one ton of Portland cement emits approximately one ton of CO_2 into the atmosphere In this respect, the geopolymer technology shows considerable promise for application in concrete industry as an alternative binder to the Portland cement. In terms of global warming, the geopolymer technology could significantly reduce the CO_2 emission to the atmosphere caused by the cement industries.

1.1 Geopolymer

Geopolymers are chains or networks of mineral molecules linked with co-Valant bonds. Geopolymer concrete is the result of the reaction of materials containing alumina silicate with concentrated alkaline solution to produce an inorganic polymer binder. Geopolymer concrete is proven to have excellent engineering properties with reduced carbon foot print.

Geopolymer concrete not only reduces the green house gas emission but also it utilizes a large amount of industrial waste materials. There are two main constituents of geopolymers, namely the source materials and the alkaline liquids. The source materials for geopolymers based on alumina-silicate should be

rich in silicon (Si) and aluminum (Al). Geopolymer concrete can be manufactured by using the low-calcium (ASTM Class F) fly ash obtained from coal-burning power stations. Alkaline solution is used as the biding material for geopolymer concrete. Alkaline solution is made using sodium hydroxide (NaOH) and sodium silicate (NaCl) solutions. Due to this attribute it is becoming an increasingly popular material for construction.

1.2 Geopolymer Formation

Geopolymers are members of the family of inorganic polymers formed by the reaction between an alkaline solution and an alum inosilicate source. The name geopolymer was formed by a French Professor Davirdovits in 1978 to represent a broad range of materials characterized by networks of inorganic molecules. The geopolymers depend on thermally activated natural materials like Met kaolinite or industrial by products like fly ash or slag to provide a source of silicon (Si) and aluminum (Al). These silicon and Aluminum is dissolved in an alkaline activating solution and subsequently polymerizes into molecular chains and become the binder.

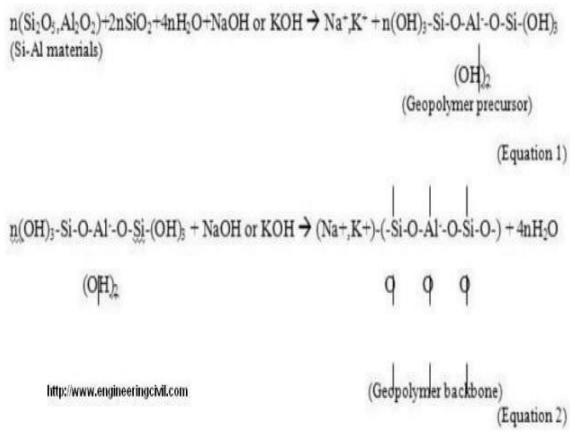

The ultimate structure of the geopolymer depends largely on the ratio of Si to Al (Si:Al), with the materials most often considered for use in transportation infrastructure typically having an Si:Al between 2 and 3.5.The reaction of Fly Ash with anAqueous solution containing Sodium Hydroxide and Sodium Silicate in their mass ratio, results in a material with three dimensional polymeric chain and ring structure consisting of Si-O-Al-O bonds (Davidovits, 1994).

The schematic formation of geopolymer material can be shown as described by Equations (1) and (2) (Davidovits, 1994). The last term in Equation 2 reveals that water is released during the chemical reaction that occurs in the formation of geopolymers. This water, expelled from the geopolymer matrix during the curing and further drying periods, leaves behind nano-pores in the matrix, which provide benefits to the performance of geopolymers.

1.3 Fibre Reinforced Geopolymer Concrete

Fibre Reinforced Concrete (FRC) is formed from a combination of different types of fibres which differ in material properties, remain bonded together when added in concrete and retain their identities and properties. The combining of fibres, often called hybridization.Addition of fibres in concrete has an enormous potential in arresting crack. As the fibres in the concrete structures have been effective in improving the structural performance under gravity loads, it improves the structural strength, ductility, as well as in increasing shear strength, energy absorption capacity, and damage tolerance in members subjected to several loading conditions. In this work Basalt fibre and Steel fibre with different volume fractions are used to make hybrid fibres.

1.4 Basalt fibre

Basalt fibre is a material made from extremely fine fibres of basalt, which is composed of the minerals plagioclase, pyroxene, and olivine. Basalt fibre is a relative new comer to fibre reinforced polymers (FRPs) and structural composites. It has a similar chemical composition as glass fibre but has better strength characteristics, and unlike most glass fibres is highly resistant to alkaline, acidic and salt attack making it a good candidate for concrete, bridge and shoreline structures, higher radiation resistance, higher compression strength, and higher shear strength.Basalt fibre having a diameter 13 µm and length 18 mm are used for the present study. The variable considered in this study includes three different values of volume fraction of basalt fibres viz.

0%, 0.15%, and 0.3%. These basalt fibres have an aspect ratio of 1366.

1.5 Steel fiber

Crimped steel fibres supplied by Stewols India (P) Ltd., Nagpur are used for this experimental work. Crimpled steel fibre having a diameter 0.45 mm and length 30 mm are used for the present study. The variable considered in this study includes three different values of volume fraction of steel fibres viz. 0%, 0.5%, and 1%. These steel fibres has an aspect ratio of 66 and ultimate tensile strength of 800 MPa.

2. REVIEW OF LITERATURE

Experimental work was conducted by Abdul et al (2012) to find the properties of geopolymer concrete. Reported that geopolymer concrete utilizes an alternate material including fly ash as binding material in place of cement. This fly ash reacts with alkaline solution (NaOH) and sodium silicate (Na_2SiO_3) to form a gel which binds the fine and coarse aggregates. An attempt has been made to find out an optimum mix for the geopolymer concrete. Concrete cubes of size 150 mm x 150 mm x 150 mm were prepared and cured under steam curing for 24 hours. The compressive strength was found out at 7 days and 28 days. The results are compared.Experimental research was done on the shear behavior of reinforced GPC and OPCC beams by Ambily et al. (2011). In this study, three GPC mixes and one OPCC mix were considered and all the beams were provided with the same flexural and shear reinforcement and the beams were tested under two point loading with two shear span to depth ratios of 1.5 and 2 for each of the mixes. The details of the mix designs of GPC mixes, parameters investigated, preparation of RGPC beams, testing and evaluation of structural behavior with respect to cracking, service load, deflections at various stages and failure modes. Comparison of shear design procedure of beams was made by conventional IS 456 2000 approach and Modified compression field theory.Davidovits et al. (1994) reported that in the production of geopolymer about less than 3/5 of energy is required and 80–90% less CO_2 is generated than in the production of OPC. Thus, it is of great significance in environmental protection for the development and application of geopolymer cement.

Investigation on the influence of the superplasticizer and NaOH concentration on the geopolymer concrete was carried out by Fadhil et al. (2011). Found out that low superplasticizers content had poor filling and passing ability. Superplasticizers dosage upto 6% contributed to passing ability and workability further increase in dosage does not contribute any change. . As the NaOH solution concentration increases from 8M to 14M compressive strength of geopolymer concrete increases but further increase in concentration of NaOH solution decreased compressive strength on geopolymer concrete.

Experimental investigation carried out by Djwantoro et al (2008) on the short term engineering properties of Geopolymer concrete. In Geopolymer mortar, Portland cement is not utilized at all. In this research, the influence of various parameters on the short term engineering properties of fresh and hardened low-calcium fly ash-based Geopolymer mortar were studied.

3. EXPERIMENTAL ANALYSIS

The aim of the project is to find the shear behavior of hybrid fibre reinforced geopolymer concrete beams under two point loading. Subsequently it involves the preparation of fly ash and GGBS based geopolymer concrete. For geopolymer concrete trial and error process is used to determine the mix proportion which will have strength in range of 40-50 MPa. This concrete is used for the casting of fly ash and GGBS-based hybrid fibre reinforced geopolymer concrete beams (F&GHGPC) specimen which will be tested to find ultimate load and behavior under two point monotonic loading.

3.1 MATERIALS USED

The materials used in the production of geopolymer concrete are described below

3.1.1 Fly ash

In the present experimental work, low calcium, class F, (ASTM) dry fly ash obtained from the silos of Mettur thermal power plant in Tamil Nadu is used as the base material. It is shown in Fig.3.1. The presence of regular (rounded) particles and the fineness added to the

workability. It is refractory and alkaline in nature, having fineness in the range of 3000-6000 sq.cm/gm. The molar Si-Al ratio about 2 and the calcium oxide content was very low when compared to the iron oxide (Fe_2O_3) content. The color was dark grey. The properties of fly ash are given in Table 3.1.

Fig: 3.1 Fly ash

SI.no	**Properties**	**Testresults**
1	Specific gravity	2.36
2	Fineness	224 m^2/kg
3	Consistency	45%
4	Silica (SiO_2)	52%
5	Calcium (CaO)	4%
6	Ash	68-76%
7	Grade	F
8	Colour	Dark grey

3.1.2 GGBS (Ground granulated blast-furnace slag)

The chemical composition of GGBS is shown in Table 3.2. These operate at a temperature of about 1,500 degrees centigrade and are fed with a carefully controlled mixture of iron-ore, coke and limestone. The iron ore is reduced to iron and the remaining materials form a slag that floats on top of the iron. This slag is periodically tapped off as a molten liquid and if it is to be used for the manufacture of GGBS it has to be rapidly quenched in large volumes of water. The quenching optimises the cementitious properties and produces granules similar to coarse sand. This 'granulated' slag is then dried and ground to a fine powder. The GGBS is shown in Fig. 3.2.

Fig. 3.2 GGBS

Table: 3.2 Properties of GGBS

SI. No	**Properties**	**Value**
1	Colour	Off-white
2	Specific gravity	2.9
3	Fineness	>350m^2/kg
4	Bulk density	1200 kg/m^3
5	Calcium oxide	40%
6	Silica	35%
7	Alumina	13%
8	Magnesia	8%

3.1.3 Alkaline solution

A combination of the sodium hydroxide and sodium silicate solutions was used as the alkaline liquid to activate Fly ash and GGBS. Sodium hydroxide pellets used in this study are shown in Fig.3.3. The properties of sodium hydroxide are given in Table 3.3. A sodium

hydroxide solution was prepared by dissolving the sodium hydroxide pellets shown in Fig.3.3 in water. The degree of purity of the pellets was 97% and was taken into account to modify the quantities. Distilled water was used to dissolve the pellets to avoid the solutions by tap water contaminations.

Sodium based solutions were chosen because they were cheaper than Potassium based solutions. The sodium hydroxide solids were either a technical grade in flake or pellets. The sodium hydroxide flakes were obtained from TBS publishers, Calicut. The chemical composition of sodium silicate solution was Na2O - 14.7%, SiO2 - 29.4%, and water - 55.% by mass.

Fig. 3.3 Sodium hydroxide pellets

Table.3.3 Properties of sodium hydroxide (supplied by the manufacturer)

SI. No	Properties	Value
1	Molecular formula	NaOH
2	Density	2.13g/cm^3
3	Specific gravity	1.53
4	Sodium hydroxide	26.2%
5	Water	73.8%

3.2 CASTING OF SPECIMENS

Experimental work includes casting of 36 beam specimens of 100 mm breadth, 150 mm depth, 1200 mm length. The beams were subjected to monotonic loading. The variable considered in this study is three different values of fraction of steel and basalt fibres. Fly ash and GGBS– based (F&GHGPC) 18 no. of specimens were cast and tested successfully. And only fly ash- based (FHGPC) 18 no. of specimens were cast and tested successfully. Comparison of these results was done and shown in chapter 4. Shear beams were provided with two 12 mm diameter high yield strength deformed bars at bottom and 10 mm diameter bars at top. Two legged stirrups of 8 mm diameter were provided at the supports and beneath point of loads as shown in Fig. 3.4. The reinforcement are arranged in such way that the specimen will fail in shear (Fig. 3.5).

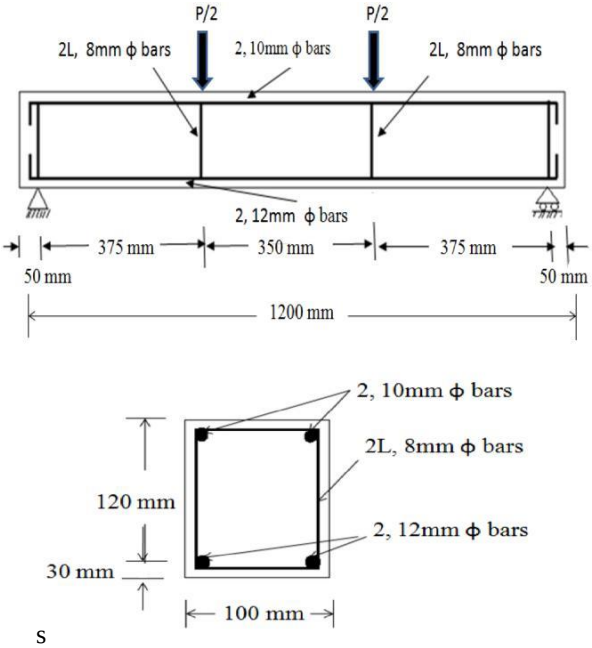

Fig. 3.4 Reinforcement detailing

Fig. 3.5 Reinforcement cage

A mixer of 60 litters capacity is used to mix the ingredients of geopolymer concrete. Mixed GPC is poured into the beam mould. It is compacted thoroughly in different layers to achieve maximum compressive strength.

4. RESULTS AND DISCUSSIONS

Total 3 beams were cast and tested. In this, 3 beams were made with fly ash and GGBS-based hybrid fibre geopolymer concrete (F&GHGPC) and remaining 3 beams were made with fly ash-based gepolymer Concrete (FHGPC). These beams tested for shear shown in Table.4.1. The results obtained from the shear test on the beams are tabulated below. The values Shown in the Table.4.2 are average of results obtained from the test on two identical beams under same type of loading. Characteristics of geopolymer concrete. Details of beam specimens used for testing shear behavior are

Table.4.1 Details of specimens

SN	Beam designation	Steel fibre (%)	Basalt fibre (%)	No. of beams
1	F&GHGPC1	0	0	2
2	F&GHGPC2	0	0.15	2
3	F&GHGPC3	0	0.3	2

Table.4.2 Test results of shear specimens

Sl. No	Beam designation	Steel fibre (%)	Basalt fibre (%)	No. of beams
1	F&GHGPC1	0	0	2
2	F&GHGPC2	0	0.15	2
3	F&GHGPC3	0	0.3	2

During the loading, cracks appeared after the first crack load, in the flexural span. As the load increased further, along with additional flexural cracks, diagonals cracks also developed in the shear span. Further increase of load led to widening of cracks already formed and the diagonal cracks propagated at a faster Rate leading to the failure of specimen. At the ultimate stage most of the cracks traversed up to the beam and sudden failure occurred at the shear span and one of wide diagonal cracks was found to have reached the top face of the beam. Crack patterns showing shear failure are illustrated below Fig 4.1

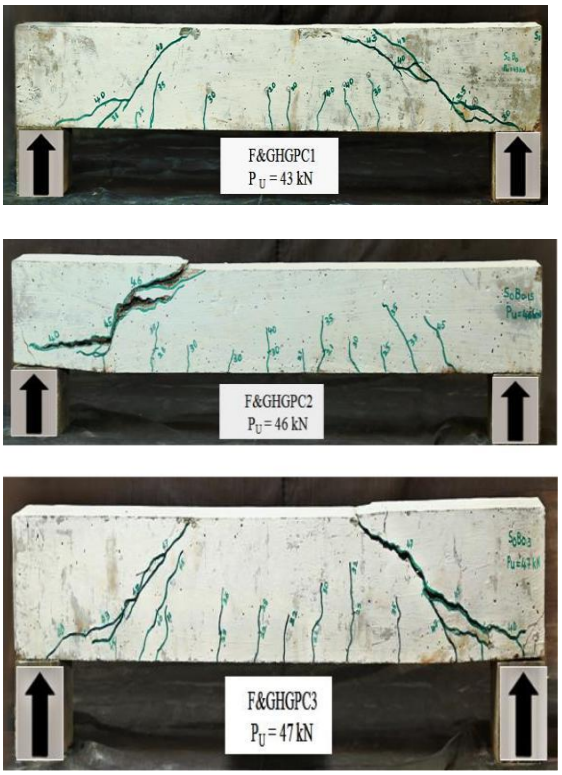

Fig. 4.1Crack patterns showing shear failure of FHGPC specimens

Due to sudden shear failure full load deflection plot could not be obtained. Therefore area up to peak load was taken to compare the energy absorption capacities as shown in the Table.4.3

Table.4.3 Energy absorption capacity for F&GHGPC specimens

Beam Designation	Energy Absorption Capacity	
	Absolute (kNm)	Relative
F&GHGPC1	0.173	1.000
F&GHGPC2	0.191	1.104
F&GHGPC3	0.215	1.240

4.1 F&GHGPC BEAMS WITH FHGPC BEAMS

3 no.of FHGPC (Fly Ash-based Hybrid fibre geopolymer reinforced concrete) beams with same volume fractions of fibres considerd in F&GHGPC (Fly Ash and GGBS-based Hybrid fibre geopolymer reinforced concrete) beams were also tested uder monotonic loading and shear failure was obtained. First crack load and ultimate load of F&GHGPC beams were compared with FHGPC beams (Fig. 4.2) and the values are shown in the Table.4.4. From the table it is clear that first crack load of F&GHGPC is more compared to FHGPC beams. The energy absoption capacity for the FHGPC beams are also obtained. Comparison of energy absorption capacity of F&GHGPC beams and FHGPC beams are shown in the Table.4.5. F&GHGPC beams are have higher energy absorption capacity when campared with FHGPC beams.

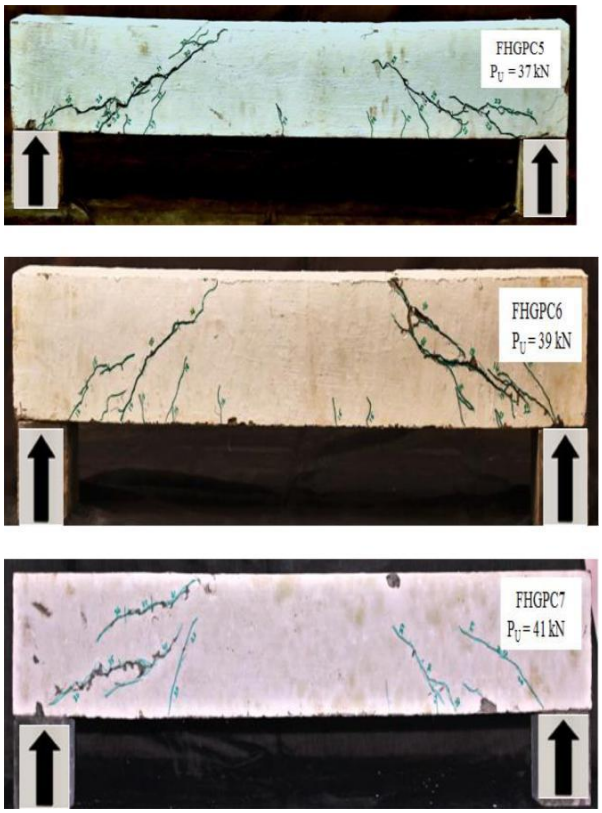

Fig. 4.2 Crack patterns showing shear failure of FHGPC specimens

Addition of GGBS (ground granulated blast furnace slag) to the fly ash significantly increases the setting time and compressive strength of geopolymer concrete. In this study 30% of fly ash is replaced by GGBS and it has shown higher first crack loads and ultimate loads when compared with only fly ash based beams.

From the above results it can be seen that first crack load increased by 100%, ultimate load increased by 86% for the F&GHGPC1(0% steel fibre and 0% basalt fibre) compared to beam FHGPC1 (0% steel fibre and 0% basalt fibre)

Table.4.4 Comparison of first crack load and ultimate load of F&GHGPC beams with FHGPC beams.

SI. No.	Volume fraction (%)	First crack load (kN)		Ultimate load (kN)	
		F&GHGPC	FHGPC	F&GSHGPC	FHGPC
1	S0B0	20	10	43	23
2	S0B0.15	21	10	46	25
3	S0B0.3	22	12	47	28

Table.4.5 Comparison of Experimental shear strength of F&GHGPC beams with FHGPC beams

SI. No.	Volume fraction (%)	Experimental shear strength τ_v (N/mm^2)	
		F&GHGPC	FHGPC
1	S0B0	2.80	1.53
2	S0B0.15	3.06	1.66
3	S0B0.3	3.13	1.86

Shear strength of all the beams in F&GHGPC and FHGPC is increasing gradually. This is due to the effect of fibres introduced in beams. We can absorb that experimental shear strength values are increasingsignificantly in all the beams.The shear strengh was measured based on the exprimental lab test. Shear strength of all the beams in F&GHGPC and FHGPC is increasing gradually. This is due to the effect of fibres introduced in beams. We can absorb that experimental shear strength values are increasing significantly in all the beams.

Table.4.6 Comparison of Energy absorption capacity of F&GHGPC beams with FHGPC beams

SI.No.	Volume frraction (%)	Energy absorption capacity (kNm)	
		F&GHGPC	FHGPC
1	S0B0	0.173	0.085
2	S0B0.15	0.191	0.110
3	S0B0.3	0.215	0.116

The load-deflection curves of beams F&HGPC1, F&HGPC2 and F&HGPC3 are shown in Fig. 4.3. Similarly load-deflection curves of beams FHGPC1, FHGPC2 and FHGPC3 are shown in Fig. 4.4.

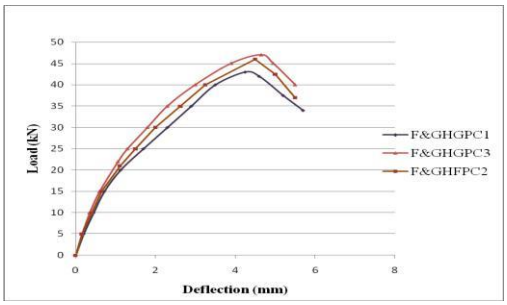

Fig.4.3 Load vs deflection of F&HGPC1, F&HGPC2 and F&HGPC3

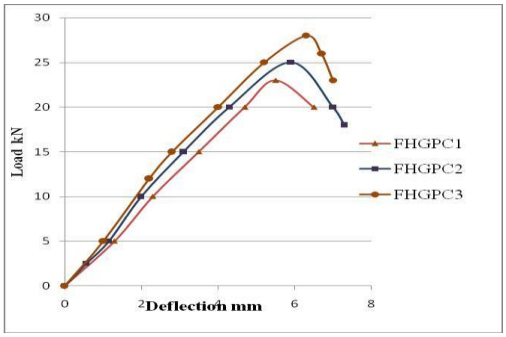

Fig. 4.4 Load vs deflection of FHGPC1, FHGPC2 and FHGPC3

CONCLUSIONS

Geopolymer concrete in structural applications has led to the total elimination of cement from concrete, which ultimately becomes "Green Concrete"The fly ash, once considered as waste material, has found usefulness through Geopolymer concrete in construction industries and become a valuable materialThe crack partten obsorved for hybrid fibre reinforced geopolymer concrete beams were similar to those reported in the literature for steel fibre reinforced portland concrete. All beams failed in ductile manner accompained by crushing of the concrete in the compression zone.While the addition of fibres improved the first crack load significantly, the improvement was marginal for ulttimate load. The first crack load was found to have increased by about 75% at steel 1% and basalt 0.3% of fibre volume, when campared to the specimens without fibres. However the increase in ultimate load was found to be only 44%.Energy absorbtion capacity increases for the beams with fibres compared to beams without fibres.Ultimate shear strength increased up to 47% for the F&GHGPC with 1% steel fibre and 0.3% basalt fibe.

Reference

1. Abdul Aleem and Arumairaj P.D., (2012), "*Optimum mix for the geopolymer concrete"*, Indian Journal of Science and Technology, Vol.5, No.3, pp.65-71.
2. Ambily, Madheswaran, Sharmila, Muthiah, (2011), "*Experimental and analytical investigations on shear*

behaviour of reinforced geopolymer concrete beams", International journals of civil and structural engineering, Volume 2,No:2, pp.122-128

3. *matrices",*Composites: Part B 67, pp. 233–238.
4. Davidovits.J (1994), *"Properties Of Geopolymer Cements"*, Proceedings of 1st International Conference on Alkaline Cements and Concretes, KIEV Ukraine, pp.131-149.
5. Djwantoro Hardjito, Chua Chung Cheak , Carrie Ho Lee Ing, (2008), *"Strength and Setting Times of Low Calcium Fly Ash-based Geopolymer Mortar"*, Curtin University of Technology, Volume 2,no.4, pp. 357-362.
6. Fadhil Nuruddin.M, Samuel Demie, Fareed Ahmed.M and Nasir Shafiq, (2011), *"Effect of 0Superplasticizer and NaOH Molarity on Workability, Compressive Strength and Microstructure Properties of Self-Compacting Geopolymer Concrete*", World Academy of Science, Engineering and Technology, pp.163-171.