International Journal of Advanced Information Science and Technology (IJAIST) ISSN: 2319:2682
Vol.4, No.2, February 2015 DOI:10.15693/ijaist/2015.v4i2.91-94

Detection Of Functional Anomalies Of Fetal Heart Using Auscultation Methodology

V.K.Juvilna
PG Student
Department of VLSI Design
Sethu Institute of Technology
Pulloor, Kariapatti
Virudhunagar, India

K. Monisha
Assistant Professor
Department of VLSI Design
Sethu Institute of Technology
Pulloor, Kariapatti
Virudhunagar, India

Dr.R.Ganesan M.E.,Ph.D.,
Professor & Head,
Department of VLSI Design
Sethu Institute of Technology
Pulloor, Kariapatti
Virudhunagar, India

Abstract—

Our Project objective is to model a device in clinical diagnosis, which will replace for more complicated more expensive and large size diagnostic equipment. Our project results in easy operation, less cost and compact size. The existing system which is used to find the parameters such as Fetal heart rate (FHR), Intra Uterus Pressure (IUP), Fetal movement and Maternal Contractions.

Echo cardiogram scan is used for the detail study about the fetal heart function in mother's womb, which is more expensive and more complicated. Our proposed system is based on auscultation methodology. High sensitivity microphone is used to record the heart function and to detect the anomalies of acquired fetal heart signal using effective signal processing method.

Keywords — Auscultation, Intra Uterus Pressure (IUP), Fetal Heart Rate (FRT).

I. INTRODUCTION

Electronics in medical field especially clinical diagnosis plays a vital role. This project is based on auscultation methodology in gynecology applications. Auscultation is used to find the functioning of heart and lung with their rhythmic sound by the stethoscope. This has been slowly developed by electronics engineers by recording the heart sound and converted into digital then displayed for analysis. This device is known as digital stethoscope, now available in market.

The rhythmic sound is generated by four valves of the heart. The normal pattern of the rhythm is stored in data base of the system. The newly acquired heart sound is getting compared with these rhythms. The result is an interpretation of the heart function report in graphical form. This device is known as Vi-scope. It is also available in market.

This project deals with diagnose of the heart function in the mother's womb. To acquire the fetal heart sound in the mother's womb, high sensitivity microphone is used. Here, electret microphone is chosen as per our required specification. The acquired signal is getting processed in Matlab. Then the final output is to detect the anomalies of fetal heart. This method is used to find the valve functioning of fetus accurately.

II. PROPOSED METHOD

To detect the anomalies of fetal heart when the fetal heart beat range is abnormal using auscultation methodology over microphone and to avoid redundant scanning.

The following details are the technical details which are used in this method.

BLOCK DIAGRAM:

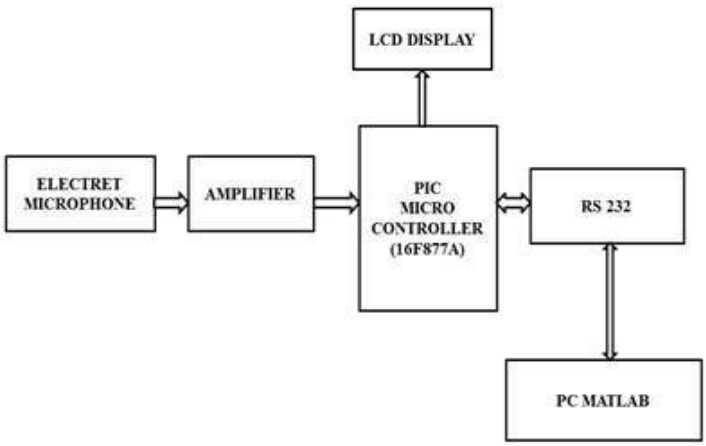

DIAPHRAGM

A Diaphragm is a plastic disc or bell (hollow cup) used to acquire heart sound. If the diaphragm is placed on the patient's body, heart sound vibrates the diaphragm, creating acoustic pressure waves which travel up the tubing to the listener's ears. If the bell is placed on the patient's body, the vibrations of the skin directly produce acoustic

pressure waves traveling up to the listener's ears. The bell transmits low frequency sounds, while the diaphragm transmits higher frequency sounds.

The Diaphragm is used to acquire fetal heart sound. The fetal heart sound vibrates the diaphragm. The vibrated heart sound from the diaphragm is given to the microphone.

MICROPHONE:

The microphone converts sound signal into an electrical signal. It consists of two metal plates separated by granules of carbon. One plate is very thin and faces outward, acting as diaphragm which vibrates when it is struck by sound waves. When the diaphragm vibrates, it causes other components in the microphone to vibrate. These vibrations are converted into an electrical current which becomes the audio signal. Direct current passes through the two plates and the changing resistance results in changing current. The current then passes through a telephone system to change the sound into an electrical signal. Carbon microphones were known for their high output level performance, low impedance and reasonably low cost.

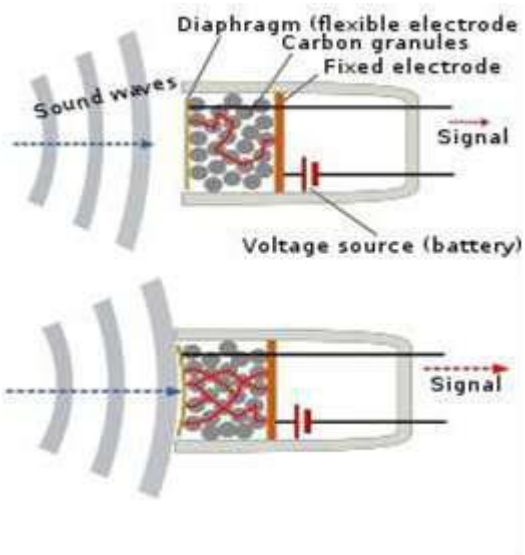

Figure 1. **Function of microphone**

Here microphone is used to acquire the fetal heart sound from the pregnant women. The sound signal is converted into electrical signal. The converted electrical signal is given as input to the amplifier.

AMPLIFIER:

An amplifier is that amplifies low-power audio signals (signals composed primarily of frequencies between 20 - 20 000 Hz, the human range of hearing) from the electret microphone.

The acquired fetal heart sound is not much audible to get clear output. So, here we are using amplifier to increase the sound level.

The microphone output is in terms of millivolts. So we have to amplify the signal in terms of volts by using inverting amplifier.

Inverting Amplifier

It is used as an amplifier from any sensor depends upon the feedback resistance.

The amplifier output in terms of voltage will be.

$$V_{out} \quad R_f / R_{in})V_{in}$$

COMPARATOR:

A comparator is a circuit which compares the signal voltage applied at one input of the op-amp with a known reference voltage at the other input. It is basically an open-loop op-amp with output $\pm V_{sat} = V_{cc.}$ It can be seen that the change in the output state takes place with an increment of the input only up to 2mV. This is the uncertainty region where output cannot be directly defined. This region is due to input off-set voltage and off-set null compensating technique can be used to eliminate this. In practical $sV_{ref}$is obtained by using a 10kΩ potentiometer which forms a voltage divider with the supply voltage V^+ and $V^-$with the wiper connected to the negative input terminal.

The output from the 3 stage amplifier may have some noise. Those noises can be reduced by using diode and capacitor.

***PIC MICROCONTROLLER*:**

In this project 16F877A PIC microcontroller is used. The ADC is in built in 16F877A PIC microcontroller. The analog output of the amplifier is directly fed into analog port of the PIC microcontroller.

Various microcontrollers offer different kinds of memories. EEPROM, EPROM, FLASH etc. are some of the memories of which FLASH is the most recently developed. Technology that is used in pic16F877 is flash technology, so that data is retained even when the power is switched off. Easy Programming and Erasing are other features of PIC 16F877A.

SPECIAL FEATURES OF PIC MICROCONTROLLER:
CORE FEATURES:

- High-performance RISC CPU.
- Operating speed: DC - 20 MHz clock input.
- Low-power, high-speed.
- Only single 5V source needed.
- Operating voltage range: 2.5V to 5.5V.
- Source Current: 25 ma.
- Low-power consumption.

***PERIPHERAL FEATURES*:**

- 10-bit multi-channel Analog-to-Digital converter.

Here 16F877A PIC microcontroller is used.

ADC:

The input given to microcontroller through the ADC. The Analog to digital conversion is performed in ADC 0809. The Analog amplified input is given to pic microcontroller in which ADC is in built. The analog to digital

converter is used to convert the input analog signal to corresponding digital signal. The converted digital output is given to microcontroller.

LCD DISPLAY:

Liquid Crystal Display has 16 pins in which first three and 15th pins are used for power supply. 4th pin is RS (Register Selection) if it is low data and if it is high command will be displayed. 5th pin is R/W if it is low it performs write operation. 6th pin act as enable and remaining pins are data lines.

The LCD display is interfaced to display the fetal heart beat range continuously.

RS–232C SERIAL DATA STANDARD:

RS-232C specifies 25 signal pins and it specifies that the DTE connector should be a male, and the DCE connector should be a female.

Here 9 pin D type female connector is used. It is used to interfacing the pic microcontroller with PC system.

LEVEL LOGIC CONVERTER (MAX 232):

The microcontroller is interfaced to PC by level logic converter. MAX 232 IC performs this function. AT89C51 provides one serial port in which 10th act as receiver and 11th pin act as transmitter. The microcontroller output is converted to +12v and -12v from by voltage doublers circuit in level logic converter and this output is connected to 9 pin D type connector through this PC is interfaced.

The MAX 232 is nothing but level logic converter which is used to interface the controller with PC. The controller input and output is the TTL logic level. But PC accepts only RS 232 logic. The MAX 232 is used to convert the TTL logic to RS 232 logic and vice versa. That is 0v represent +12v and 5v represent -12v respectively.

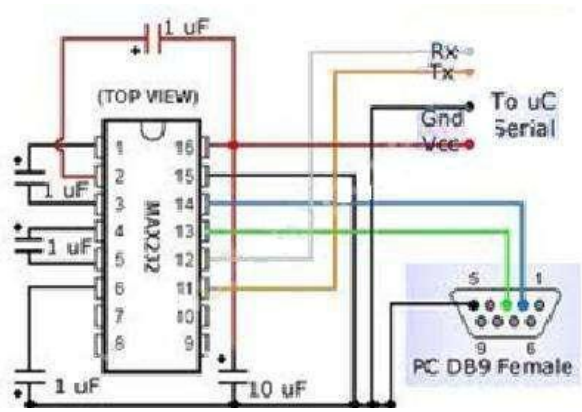

Figue 2. **Interfacing MAX 232 with PC**

***WAVEFORM ANALYSIS WITH MATLAB*:**

The digital signal from PIC microcontroller will be interfaced with PC system using RS232 (9 pin D type connector). Here Matlab program can be written for detecting the irregularities of fetal heart. The fetal heart beat range is 120-160 beats per minute. The fetal heart is normal within this range. The anomalies can be detected when the fetal heart beat range is abnormal. Waveform will be display using Matlab program. Using this waveform the irregularities of fetal heart is detected.

The waveform can be taken as handouts.

Various ranges of fetal heart beat is taken and analyzed below:

When the fetal heart beat range is in between 120-160 bpm

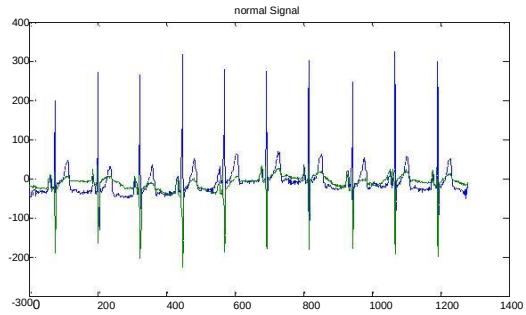

(Fetal heart beat range : 122)

When the fetal heart beat range is not in between 120-160 bpm

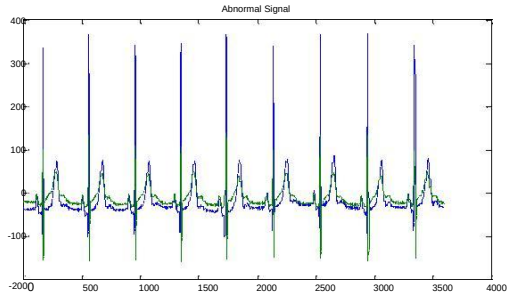

(Fetal heart beat range: 174)

***ADVANTAGE OF PROPOSED METHOD*:**

- It is simple method to detect anomalies of fetal heart during prenatal stage.
- Avoids unnecessary scanning during pregnancy.
- It is comfortable for patient.
- Easy to use.
- No need of coupling medium.

IIICONCLUSION:

This project is used to detect the anomalies of fetal heart during prenatal stage without any problem to the pregnant women. The normal fetal heart beat range is 120-160 beats per minute. Anomalies can be detected when the fetal heart beat range is abnormal (not in between 120-160bpm). The various ranges of fetal heart beat can be taken. The electret microphone

is used during 18th week of pregnancy to acquire fetal heart sound clearly. Then it is processed and finally it can be shown in the form of waveform. The waveform from Matlab coding is used to analyze the P, Q, R, S, T of the waveform and detect the anomalies of various ranges of fetal heart beat.

III REFERENCES

[1] Amir Sweha,M and Trevor.W.Hacker (1999) 'Interpretation of the electronic fetal heart rate during labor'- Am Fam physician May1 vol.59, no.9, pp.2487-2500.

[2] Dawes,Vand Gilles,M (1995) 'Intermittent auscultation for the intrapartum assessment of fetal well-being in Western Australia'-Health department of western Australia, Perth may 1995

[3] Hai-Xia Yan and Jian-Jun Yan (2012) 'Nonlinear Analysis of Auscultation Signals in TCM Using the Combination ofWavelet Packet TransformandSample Entropy'-based complementary and alternative medicine, Vol 2012, article Id 247012.

[4] Park, Y and Tang, H, 'Separation of heart sound signal from noise in joint cyclefrequency-time-frequency domains based on fuzzy detection'- IEEE Trans Biomed Eng. 2010 Oct;57(10):2438-47. Epub 2010 Jun 10.

[5] Ghaderi, F and Mohseni, HR, 'Localizing heart sounds in respiratory signals using singular spectrum analysis'- IEEE Trans Biomed Eng. 2011 Dec;58(12):3360-7. Epub 2011 Jul 22.

[6] Sklansky M, Tang A, Levy D, Grossfeld P, Kashani I, Shaughnessy R, et al. Maternal psychological impact of fetal echocardiography. J Am Soc Echocardiogr 2002;15:159-66

[7] Glickstein JS, Buyon J, Friedman D. Pulsed Doppler echocardiographic assessment of the fetal PR interval. Am J Cardiol 2000;86:236-9.

[8] Kleinman C, Donnerstein R, Jaffe C, DeVore G, Weinstein EM, Lynch DC, et al. Fetal echocardiography. A tool for evaluation of in utero cardiac arrhythmias and monitoring of in utero therapy. Am J Cardiol 1983;51:237-43.

[9]Tan J, Silverman NH, Hoffman JIE, Villegas M, Schmidt KG. Cardiac dimensions determined by cross-sectional echocardiechocardiography in the normal human fetus from 18 weeks to term. Am J Cardiol 1992;70:1459-67

[10]Krebs HB, Petres RE, Dunn LJ, Jordaan HV, Segreti A. Intrapartum fetal heart rate monitoring. I. Classification and prognosis of fetal heart rate patterns. *Am J Obstet Gynecol*. 1979;133:762–72

[11] Druzin ML. Antepartum fetal heart rate monitoring. State of the art. *Clin Perinatol*. 1989;16:627–42.

[12] Fetal heart rate patterns: monitoring, interpretation, and management. ACOG technical bulletin no. 207. Washington, D.C.: ACOG, 1995.

AUTHOR'S PROFILE

V.K.JUVILNA received her B.E. degree in Electronics and Communication Engineering from Erode Sengunthar Engineering college, Erode, Anna University, Chennai, India, in 2013. Pursuing M.E. degree in VLSI Design from Sethu Institute of Technology, Anna University, Chennai, India. Her research interest includes medical electronics and VLSI design.

K.MONISHA received her B.E.Electronics and Communication Engineering from K.L.N College of Engineering in the year 2010 and M.E. VLSI DESIGN from Sethu Institute of Technology in the year 2012. He is presently working as an Assistant Professor in the department of ECE at Sethu Institute of Technology, India. His research interests include Testing of VLSI and Analog VLSI.

Dr.R.Ganesan received his B.E. in Instrumentation & Control Engineering from Arulmigu Kalasalingam College Of Engineering and M.E. (Instrume-ntation) from Madras Institute of Tech- nology in the year 1991 and 1999 respectively. He has completed his Ph.D. from Anna University, Chennai, India in 2010. He is presently working as Professor and head in the department of M.E-VLSI Design at Sethu Institute of Technology, India. He has published more than 25 research papers in the National & International Journals/ Conferences. His research interests are VLSI design, Image Processing, Neural Networks and Genetic algorithms.