International Journal of Advanced Information Science and Technology (IJAIST) ISSN: 2319:2682
Vol.6, No.11, November 2017 DOI:10.15693/ijaist/2017.v6i11.95-109

Design Optimization and Analysis of Missile Canister Testing Chamber with Varying Bolts

M. Swarna[1], K. Anusha[2]
[1, 2] Assistant Professor
[1, 2] Department of Mechanical Engineering,
[1, 2] Samskruti College of Engineering &Technology,
[1, 2] Hyderabad, India
swarnamkp@gmail.com

anusha.kuntala@yahoo.com

Abstract: Canister testing Chamber is one of the most critical components in Defence Organization. Unavailability of data and literature regarding Missile Canister, are considered to be one of the main contributors for the failure of manufacturing Canister Chambers in a local industry. Canister is used for carrying, storing and launching of missile. During storage and launching, the canister is subjected to an internal pressure of 45 kg/cm2 and external pressure of 9 kg/ cm2 important to test the canister for these pressures. The internal and external pressure testing chamber is used to test the canister. The canister is placed inside the testing chamber. Thus, the primary objective of this thesis is to develop a canister testing chamber and predicting the performance of canister by ANSYS a finite element analysis package.

The internal and external pressure testing of the canister is done by closing the canister both ends by dummy dished ends. The chamber will be used for the testing of the integrated canister assembly for the external pressure of 9 kg/ cm^2 45 kg/ cm^2 specially to perform internal and external pressure testing of the canister. To estimate the structural stress, three-dimensional model of a canister chamber was made by finite element method using CATIA software. Here in this dissertation, bolt size is gradually varied from M24 to M36 and the results were analyzed to select a bolt size which ensures zero leak-proof joint and can sustain for the internal pressures induced.

I.INTRODUCTION

1.1 CANISTER: Canister is a cylindrical container for holding, carrying, storing and launching of missile. Usually specified object or substance.

Fig.1.1 Canister with missile

1.2TYPES OF CANISTERS

1. Horizontal canister
2. Vertical canister

1.3 COMPONENTS USED IN CANISTER

1. Chamber shells
2. Canister dished ends
3. Support legs
4. Bolts
5. Pressure gauges

1.3.1 Chamber shells/pressure vessels:

A pressure vessel is enclosed container designed to hold gases or liquids at a pressure substantially different from the ambient pressure. A pressure vessel is defined as a vessel in which the pressure is obtained from an indirect source or by the application of heat from an indirect

Source or a direct source. The vessel proper terminates at: (a) the first circumferential joint for welded end connections; (b) the face of the first flange in bolted flange connections; or (c) the first threaded joint in threaded connections. Pressure vessels include but are not limited to compressed gas storage tanks, anhydrous ammonia tanks, hydro pneumatic tanks, autoclaves, hot water storage tanks, chemical reactors and refrigerant vessels, designed for a pressure greater than 15 psi and a volume greater than 5 cubic feet in volume or one and one-half cubic feet iv volume with a pressure greater than 600 psi.

Theoretically, a spherical pressure vessel has approximately twice the strength of a cylindrical pressure vessel. However, a spherical shape is difficult to manufacture, and therefore more expensive, so most pressure vessels are cylindrical with2:1 semi-elliptical heads or end caps on each end. Smaller pressure vessels Are assembled from a pipe and two covers. A disadvantage of these vessels is that greater breadths are more expensive, so that for example the most economic shape of a 1000 litters (35 cu ft), 250 bars (3,600 psi) pressure vessel might be a breadth of 914.4 mm (36 in) and a width of 1,701.8 mm(67 in)including the 2:1 semi- elliptical domed end caps.

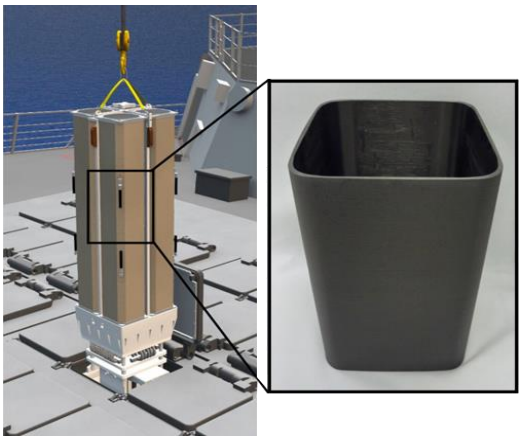

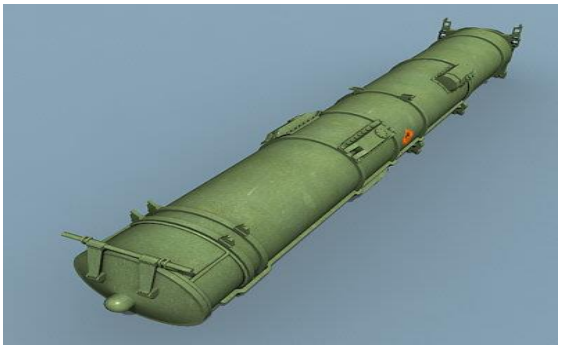

Fig. 1.2 Vertical and Horizontal canisters

1.3.1.1 Application:

Pressure vessels are used in a variety of applications in both industry and the private sector. They appear in these sectors as industrial compressed air receivers and domestic hot water storage tanks. Other examples of pressure vessels are diving cylinders, recompression chambers, distillation towers, autoclaves, and many other vessels in mining operations. Oil refineries and petrochemical plants, nuclear reactor vessels, submarine and space ship habitats, pneumatic reservoirs, hydraulic reservoirs under pressure, rail vehicle airbrake reservoirs, road vehicle airbrake reservoirs, and storage vessels for liquefied gases such as ammonia, chlorine, propane, butane, and LPG.

Many pressure vessels are made of steel. To manufacture a cylindrical or spherical pressure vessel, rolled and possibly forged parts would have to be welded together. Some mechanical properties of steel achieved by rolling or forging, could be adversely affected by welding, unless special precautions are taken. In addition to adequate mechanical strength, current standards dictate the use of steel with a high impact resistance, especially for vessels used in low temperatures. In applications where carbon steel would suffer corrosion, special corrosion material should also be used.Some pressure vessels are made of composite materials. Such as filament wound composite using carbon fiber held in place with a polymer. Du to the very high tensile strength of fiber these vessels can be very light, but are much more difficult to manufacture. The composite material may be wound around a metal liner, forming a composite overwrapped pressure vessel.

Other very common materials include polymers such as PET in carbonated beverage containers and copper in plumbing. Pressure vessels may be lined with various metals, ceramics, or polymers to prevent leaking and protect the structure of the vessel from the contained medium. This liner may also carry a significant portion of the load. According to working conditions steel will be selected as material of vessel.Types of steels are a large family of metals. All of them are alloys in which iron is mixed with carbon and other elements. Steels are described as mild, medium or high carbon steels according to the percentage of carbon they contain, although this is never greater than about 1.5%.

1.3.2 Canister dished ends: dishes are generally used to close the ends of canister chamber.

Generally, they are two types

1. Fixed type dishes
2. Clamped type dishes

1.3.2.1 Fixed type dishes: in this type, dishes are welded to canister to prevent leakage of pressure.

1.3.2.2 Clamped type:

In this type, dishes are used to open or close the canister chamber through clamps and it act as a door to loading of missile. Clamped type dishes are fastened by using bolts; bolts play major role in designing of canister chamber. For this application M12, M18, M24, M30 and M36 bolts are analyzed. Properties of these bolts are shown below.

1.3.3 Support legs:

The canister testing chamber will have supports externally called support legs for fixing the same on foundation.

1.3.4 Definition of bolt:

Bolt s are defined as headed fasteners having external threads that met an exacting, uniform bolt thread specification such that they can accept a no tapered nut.

1.3.4.1 Preferred diameters:

Preferred nominal diameters for bolts and threaded rod are as listed below. The fourth series listed below should be limited to unusual requirements when none of the preceding series can be used. Reference individual standards prior to specification. Sizes M5 to M45 are commonly used in construction.

First choice: M2 2.5 3 4 5 6 8 10 12 16 20 **24 30 36**
Second choice: M3.5 14 18 22 17 33 39 45
Third choice: M15 17 25 40

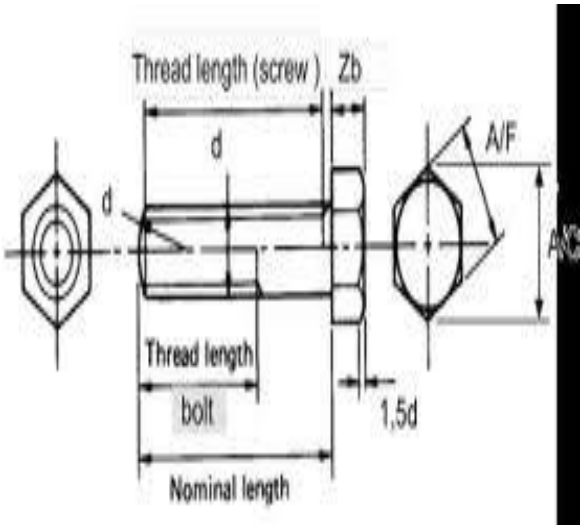

Fig: 1.3 M12 bolt

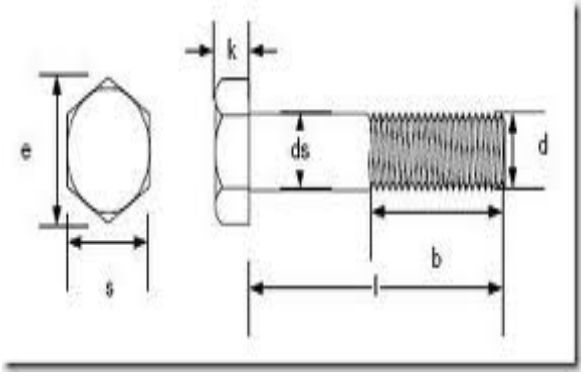

Fig 1.4 M36 bolt

1.3.5 Pressure gauge:

Many techniques have been developed for the measurement of pressure and vacuum. Instruments used to measure pressure are called pressure gauges or vacuum gauges. Two types of pressure gauges are used, one is analog pressure and the other is digital pressure gauge.

1.4 CANISTER TESTING CHAMBER:

]The canister testing chamber is used for testing the canister. This chamber will be used for the testing of the integrated chamber assembly for the internal pressure of 45 bar and external pressure of 9 bar. The testing chamber will be dedicated specially to perform the internal and external pressure testing.

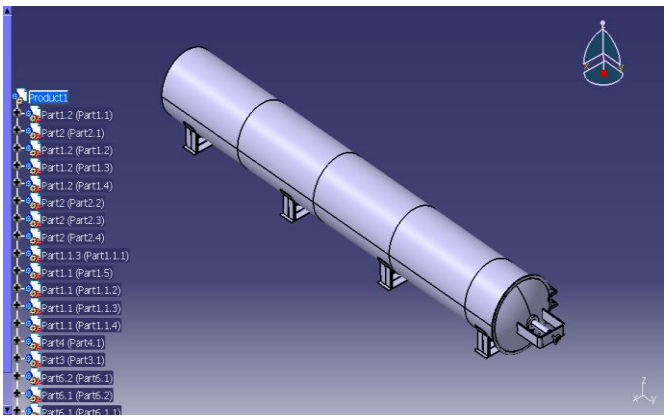

Fig: 1.5 Canister testing chamber

1.4.1 Material used for canister testing chamber: Steel is basically an alloy of iron and carbon with a small percentage of other metals such as nickel, chromium, aluminum, cobalt, tungsten etc. steel is hard ductile and malleable solid and probably the most solid material

after plastic and iron. If we draw a comparison between iron and steel, we find steel in many ways even better than iron. Steel may not be as strong as iron but it is far more resistant and does not corrode and gets rusted like iron does. And that is the reason it is used in making of drills and tools and power saws. The hardness and rigidity of HSS depends on the metal used in the making of alloy and its percentage of composition in it.

Basically, this steel is used in making of tools and cut the metals Carbon steels, which can include high carbon steel and high alloy steel, are the softest and usually the cheapest of seven types we offer. Many wood working tools are made from this material. Many craftsmen like carbon steel because the tools are soft enough to sharpen with a file.

Virtually any woodworking tool can be found in a carbon steel version. Some woodworking tools are only available in carbon steel or carbide tipped because it is too difficult to make them from anything else or they would be too expensive. If you are cutting soft wood or just a few holes in hardwoods or plastics. Carbon steel is your answer. If you have a lot of holes to cut in hard material, you want to choose a better grade of steel. The tools we manufacture from carbon steel are heated to 62c hardness and cannot be sharpened with a file. A stone type of grinding wheel is required to re-sharpen them.

II. OBJECTIVE AND METHODOLOGY

2.1 SCOPE OF WORK

This design is a process that entails many complicated procedures which involve many aspects of knowledge, experience and interrelationships between disciplines. These decisions were typically made sequentially by individuals or teams with expertise in various areas of design process. The design process utilizes a combination of hand estimations, predictions from software course, and physical testing at each phase of the design process, interactively, in order to arrive at on optimum configuration. Each discipline involved in the design process as the overtime involved in its own set of automated tools. Traditionally, container designers used a combination of formulas, charts, and rules of thumb and verified their predictions with experiments. These experiments included mechanical testing, wind tunnel testing, flight testing and target effects testing of pit fall and arena fragmentation.It has been decided that development of canister testing chamber is based upon the canister dimensions and loads. In the first stage the basic structural shape dimension are determined based on the required effect of fragment and range. The second stage consists of the development of 3-d structures. The third stage includes validity of the structure by considering for safety. There have been some efforts made to integrate the various areas of canister testing chamber design, the software ANSYS comes closest to achieving this. Important aspects of these models are: geometry, loading and that mimic the actual loading conditions and interface conditions with the canister structures. The focus in this study will be on designing, analyzing at each design phases and modeling of canister testing chamber.

2.2 Methodology

- The methodology adopted in the project has listed below:
- Design calculations of canister testing chamber are decided based up on canister dimensions and loads.
- from the calculations, a 3-D model of chamber is developed using CATIA.
- after developing the model, Finite Element Analysis is carried out for the internal pressure, deflection and stresses on the Chamber. And also, factor of safety is calculated and this should be Above 1.

III. DESIGN CONSTRAINTS AND MODELLING

3.1 Construction of canister testing chamber

The canister testing chamber is designed for an internal pressure of 9 bar.

3.1.1 DESIGN FORMULAE:

The design formulas used in the "design by rule" method is based on the principal stress theory for calculating the average hoop stress. The principal stress theory of failure states that failure occurs when one of the three principal stresses reaches the yield strength of the material. Assuming that the radial stresses negligible, the other two principal stresses can be determined by simple formulas based on engineering mechanics. The Code recognizes that the shell thickness may be such that the radial stress may not be negligible, and adjustments have been made in the appropriate formulas. Various formulae used to calculate the wall thickness for numerous canister testing chamber geometries are shown below.

3.1.2 Shell Design Calculations for external pressure

Formulas for calculation of cylindrical shell Thickness

$$\mathbf{t1} = \frac{PRi}{(SE-0.6P)}$$

Where

t1 = Minimum required thickness (cm),

P = Operating pressure (kg/cm2),

Ri = Shell Inside radius (cm)

S = allowable stress (kg/cm2)

E = Weld joint efficiency factor

Design Consideration:

Operating pressure (P) = 9 kg/cm2, Shell
Inside radius (Ri) = 75 cm
Allowable stress (S) = 1200 kg/cm2,
Weld joint efficiency factor (E) = 0.6
t1 = Minimum required thickness (cm) = $\frac{(9*75)}{(1200*0.6-0.6*9)}$
= **0.944548** cm
Standard nominal thickness considered = **14** mm
Milling tolerance (m) = 0.06*t = 0.96 mm
Modification in weld portion (w) = 1.5+ if (t>12) 0.6 else 0.8
(Considering only one side welding with no back up plate)
= 2.3 mm
Bending tolerance (b) = 0**.002t**
(Considered at 0.2% of the nominal thickness)
= 0.032 mm
Final thickness (T1) = 13.73784 mm
Final standard thickness = **14** mm

3.2 Dished End-1 Design Calculations

Formulae for calculation of Dished End Thickness

$$\mathbf{t1} = \frac{PRi}{(SE-0.6P)}$$

Where
t1 = Minimum required thickness (cm),
P = Operating pressure (kg/cm2),
Ri = Shell Inside radius (cm),
S = Allowable stress (kg/cm2),
E = Weld joint efficiency factor

Design Consideration:

Operating pressure (P) = 9 kg/cm2,
Shell Inside radius (Ri) = 75 cm
Allowable stress(S) = 1200 kg/cm2,
Weld joint efficiency factor (E) = 0.6
t1 = Minimum required thickness (cm) = $\frac{(9*75)}{(1200*0.6-0.6*9)}$
= 0**.944548** cm
Standard nominal thickness considered = **14** mm
Milling tolerance (m) = 0.06*t = **0.96** mm
Modification in weld portion (w) = 1.5+ if (t>12) 0.6 else 0.8
(Considering only one side welding with no back up plate)
w = 2.3 mm
Bending tolerance (b) = 0**.002t**
(Considered at 0.2% of the nominal thickness)
= 0.032 mm
Final thickness (T1) = 13.73784 mm
Final standard thickness = **14** mm

3.3 Dished End-2 Design Calculations

Formulae for calculation of Dished End Thickness

$$\mathbf{t1} = \frac{PRiW}{2SE-0.2P}$$

Where
t1 = Minimum required thickness (cm),
P = Operating pressure (kg/cm2),
Ri = Shell Inside radius (cm),
S =Allowable stress (kg/cm2),
E = Weld joint efficiency factor,
W = Dished End Factor

Design Consideration:

Operating pressure (P) = 9 kg/cm2, Shell
Inside radius (Ri) = 75 cm,
Allowable stress (S) = 1200 kg/cm2,
Weld joint efficiency factor (E) = 1
Dished end factor (W) = $0.25 * \left(3 + \left(\frac{Ri}{0.1Ri}\right)^{0.5}\right)$
W = **1.5405** cm.
t1 = Minimum required thickness (cm) = $\frac{9*75*1.5405}{(2*1200*1-0.2*9)}$
= **0.43361** cm
Standard nominal thickness considered = **14** mm
Milling tolerance (m) = 0.06*t = **0.96** mm
Modification in weld portion (w) = 1.5+ if (t>12) 0.6 else 0.8
(Considering only one side welding with no back up plate)
w = 2.3 mm
Bending tolerance (b) = 0**.002t**
(Considered at 0.2% of the nominal thickness)
= 0.032 mm

Final thickness (T1) = **8.6281** mm
Final standard thickness = **14** mm

3.4 Shell Design Calculations for internal pressure

Formulae for calculation of cylindrical shell Thickness

$$\mathbf{t1} = \frac{PRi}{SE-0.6P}$$

Where
t1 = Minimum required thickness (cm),
P = Operating pressure (kg/cm2),
Ri = Shell Inside radius (cm),
S =Allowable stress (kg/cm2),
E = Weld joint efficiency factor.

Design Consideration:

Operating pressure (P) = 45 kg/cm2,
Shell Inside radius (Ri) = 33.5 cm
Allowable stress (S) = 1200 kg/cm2,
Weld Joint efficiency factor (E) = 1
t1 = Minimum required thickness (cm) = $\frac{45*33.5}{1200-27}$ = **1.28** cm
Standard nominal thickness considered = **14** mm
Milling tolerance (m) = 0.06*t = **0.84** mm
Modification in weld portion (w) = 1.5+ if (t>12) 0.6 else 0.8
(Considering only one side welding with no back up plate) w = 2.3 mm
Bending tolerance (b) = 0**.002t**
(Considered at 0.2% of the nominal thickness)
= 0**.028** mm
Final thickness (T1) = **8.6281** mm
Margin = 2.6
Final standard thickness with margin = **14** mm

3.5 Support Legs Design

Base Plate Design Calculations:

Formula for calculation of Base Plate Length (Lb)

$$\mathbf{Lb} = \frac{(2\times(Ri+T)\times Sin60+50)}{50}$$

Where
Ri = Inner Radius of Shell (mm),
T = Thickness of Shell (mm),

Design Consideration:

Shell Inside radius (Ri) = 750 mm,
Thickness of Shell (T) = 14 mm
Base Plate Length (Lb) = (2*(750+14)*sin60+50)/50)
= **1373.72** mm say **1400** mm
Formula for calculation of Base Plate Width (Wb)
Base Plate Width (Wb) = **{[(Ri+T)/2] /50}X 50**
= 383 mm say 400 mm

Center Rib Design Calculations:

Formula for calculation of Center Rib
Center Height from Base (Hc) = $\frac{(Ri+T+Wb+50)}{50}$**X 50**
= $\frac{(750+16+400+50)}{50}\times$**50**
= 1199 mm say 1200 mm
Height of Center Rib (H) = **(Hc – 50) – (Ri + T) Sin60 – 100**
= (1200-500-(750+14)sin60 – 100
= 382.5 mm say 385 mm
Length of Center Rib (L) = **(Lb – 100)**
= 1400-100 = 1300 mm
Thickness of the center rib (Tc) = 25 mm (fixed)

Side Rib - 1 Design Calculations:

Length of Side Rib (Ls1) – 1 = **(H+ 100)**
= 385+100 = 485 mm
Width of Side Rib (Ws1) – 1 = **(Wb – 50)**
= 400-50 = 350 mm
Thickness of the side rib (Tr1) = 25 mm (fixed)

Side Rib - 2 Design Calculations:

Length of Side Rib (Ls2) – 2 = **(H+ 100)/2**
= (385+100)/2
= 242.5 mm
Width of Side Rib (Ws1) – 2 **= (Wb – 50)**
= 400-50 =350 mm
Thickness of the side rib (Tr2) = 25 mm (fixed)

3.6 3D MODEL OF A CANISTER TESTING CHAMBER

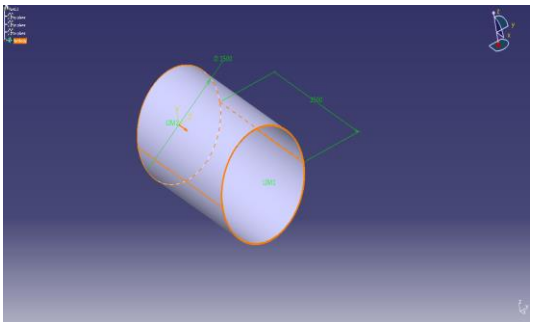

Figure: 3.1 3D model of the chamber shell

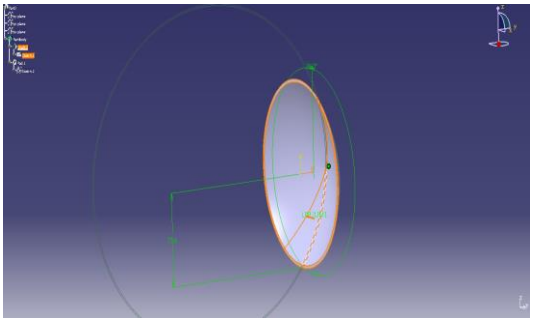

Figure: 3.2 3D model of the shell head plate

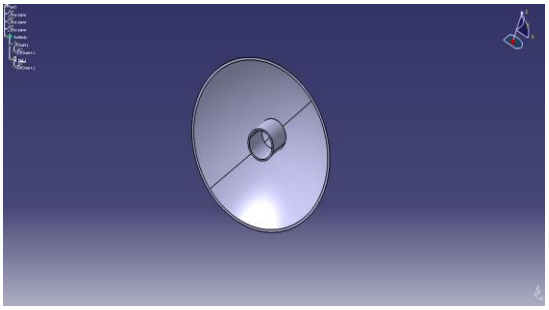

Figure: 3.3 3D model of the shell head plate 2

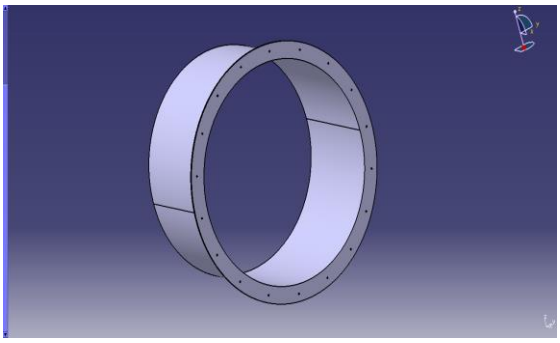

Figure: 3.4 3D model of the spacer

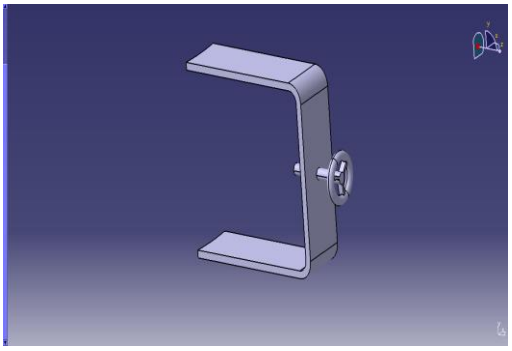

Figure: 3.5 3D model of a canister holder

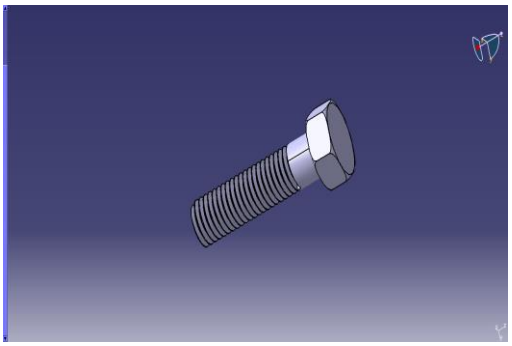

Figure: 3.6 3D model of M12 bolt

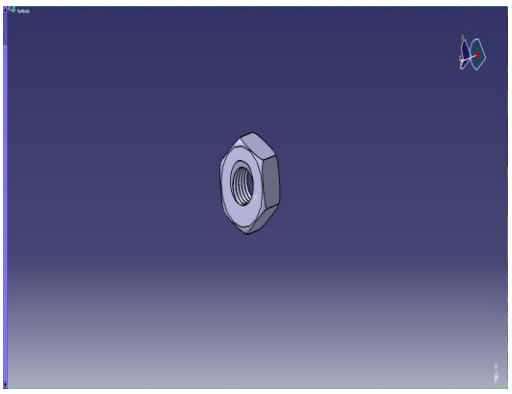

Figure: 3.7 3D model of a nut

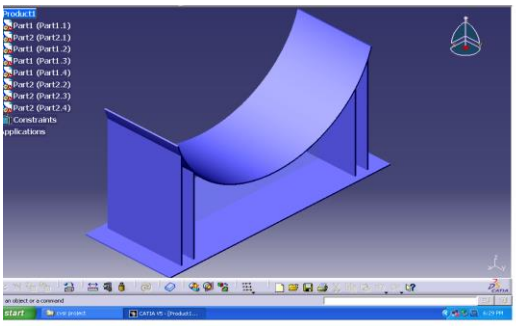

Figure: 3.8 3Dmodel of the bottom supports

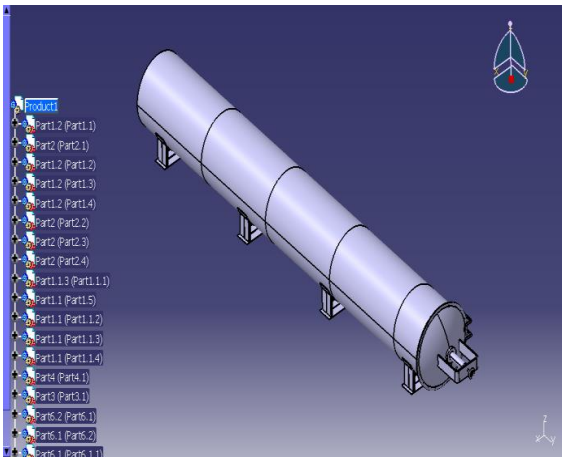

Figure: 3.9 3D model of a canister testing chamber assembly

IV. FINITE ELEMENT ANALYSIS

The finite element is a mathematical method for solving ordinary and partial different equations. Because it is a numerical method, it has then ability to solve complex problems that can be performed in differential equation form. As these types of equations occur naturally in virtually all fields of the physical sciences, the applications of the finite element method are limitless as regards the solution of practical design problems.

The ANSYS Workbench platform is the framework upon which the industry's broadest and deepest suite of advanced engineering simulation technology is built. An innovative project schematic view ties together the entire simulation process, guiding the user through even complex multi physics analyses with drag-and-drop simplicity. With bi-directional CAD connectivity, powerful highly-automated meshing, a project-level update mechanism, pervasive parameter management and integrated optimization tools, the ANSYS Workbench platform delivers unprecedented productivity, enabling Simulation Driven Product Development.

4.1Material Properties of the canister testing chamber:

The material used for the construction of canister testing chamber is IS :2062 grade steel.The mechanical properties are mentioned below

Young's Modulus (Ex) =2e5N/mm2

Poisson's Ratio = 0.3

Density = 7850Tons/mm3

4.2 Element Type Used:

Shell 93

Number of Nodes: 10

Number of DOF: 6 (Ux, Uy, Uz, Rotx, Roty, Rotz)

4.3 SHELL93 Element Description:

SHELL93 has both bending and membrane capabilities. Both in-plane and normal loads are permitted. The element has six degrees of freedom at each node: translations in the nodal x, y, and z directions and rotations about the nodal x, y, and z-axes. Stress stiffening and large deflection capabilities are included. A consistent tangent stiffness matrix option is available for use in large deflection (finite rotation) analysis.

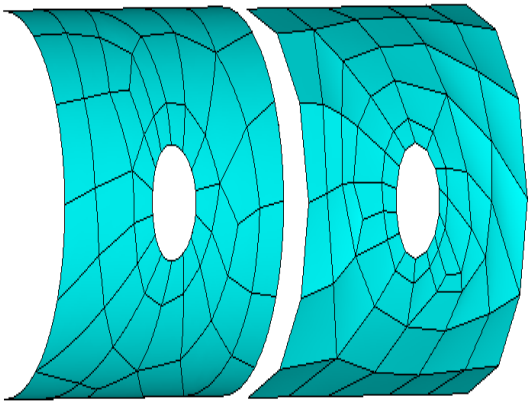

Figure: 4.1 Shell 93 and shell 181 quadratic elements

4.4 Element Types used for the Gap analysis:

Element Type1: Solid 45

No. of nodes: 8

No. of Dof: 3 (Ux, Uy, Uz)

4.5 SOLID45 Element Description

SOLID45 is used for the 3-D modeling of solid structures. The element is defined by eight nodes having three degrees of freedom at each node: translations in the nodal x, y, and z directions.

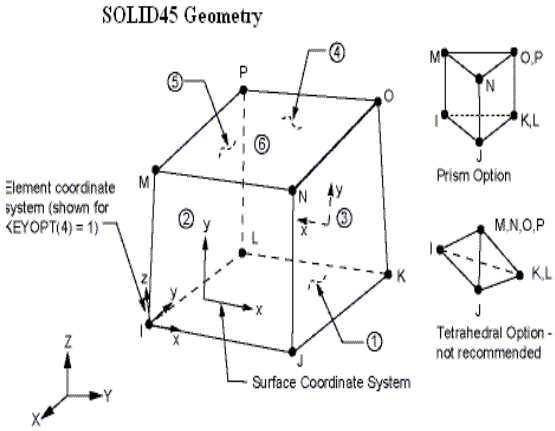

Figure: 4.2 Solid 45 geometry

The geometry, node locations, and the coordinate system for this element are shown in Figure "SOLID45 Geometry". The element is defined by eight nodes and the isotropic and orthotropic material properties.

4.6 Methodology used:

1. The 3d model is disfeatured only up to a certain length to capture the bolt locations and only a quarter models are used for the analysis to reduce the problem size.
2. The defeatured model is converted into parasolid and imported to Ansys.
3. The model is meshed with hexahedral elements using solid 45 elements.
4. The bolt locations are modeled using Beam 4 elements.
5. Bolt preload is calculated and applied as initial strain for the beam element.
6. Surface –Surface contact is established between the two mating surfaces near the bolt region.
7. Contact analysis is performed for M24, M30 and M36 bolt sizes.

4.7 Boundary Conditions:

1. Base plates are constrained in all degrees of freedom
2. Head closure is bolted to chamber using Constraint equations – Simulating bolts
3. Internal pressure of 9 Kg/cm^2 is applied
4. Gravity – 9810 mm/sec^2 is applied to simulate self-weight.

4.8 Meshing details

The canister testing chamber is meshed using shell 93 element types. It is a quad 10 node element. Thickness is given as the real constant.

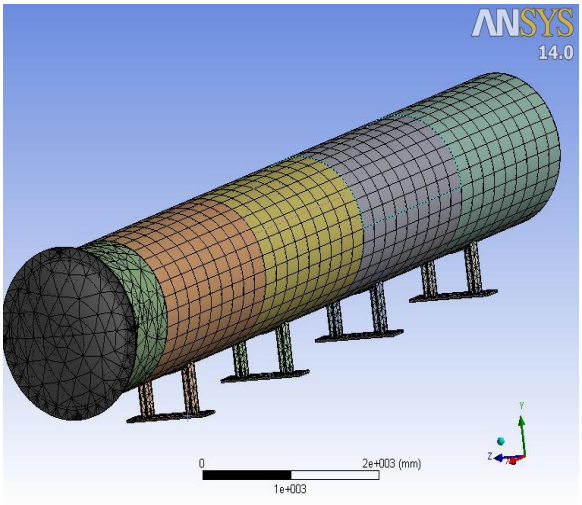

Figure: 4.3 Meshed canister assembly

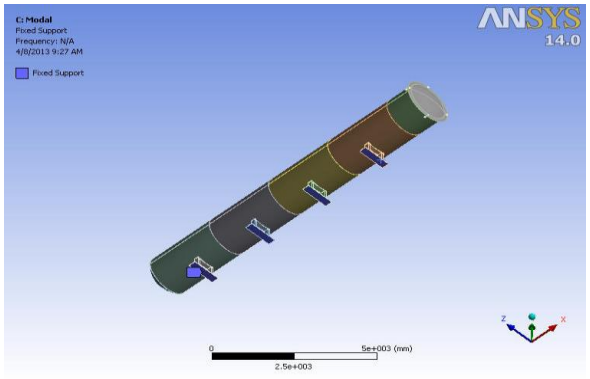

Figure: 4.4 Base plates constrained in all degrees of freedom

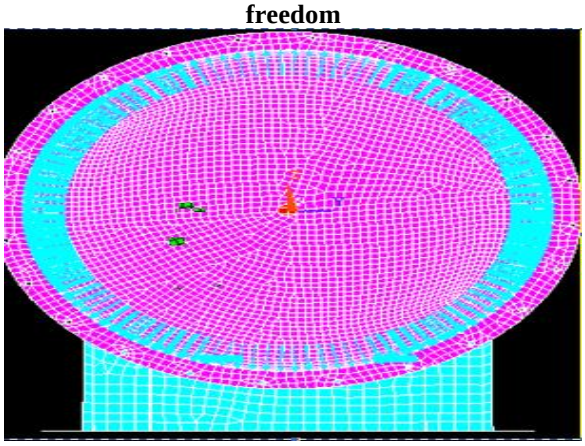

Figure: 4.5. Application of internal pressure of 9 bar

4.9 RESULTS OF PRESSURE ANALYSIS:

4.9.1 For M24 bolt

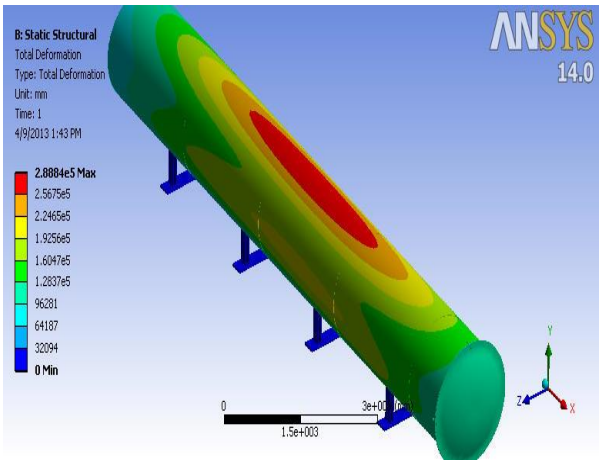

Figure: 4.6 The total deflection of the canister testing chamber for M24 bolt

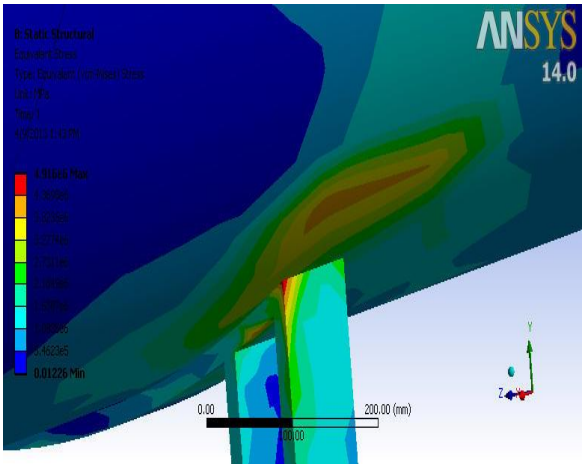

Figure: 4.7 Von-mises stress on the canister chamber for M24 bolt

4.9.2 For M30 bolt

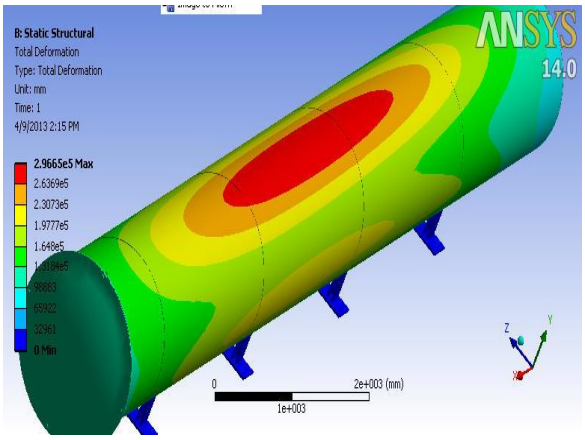

Figure: 4.8 The total deflection of the canister testing chamber for M30 bolt

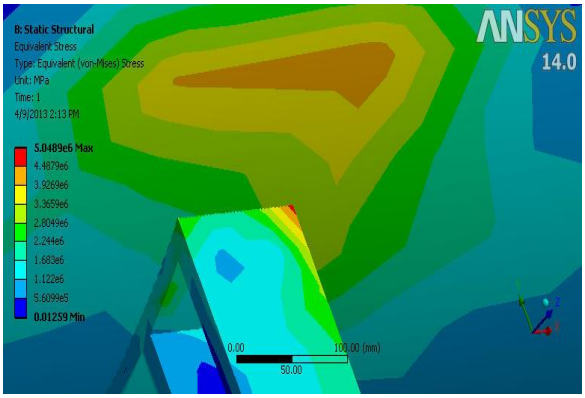

Figure: 4.9 Von-mises stress on the canister chamber for M30 bolt

4.9.3 For M36 bolt

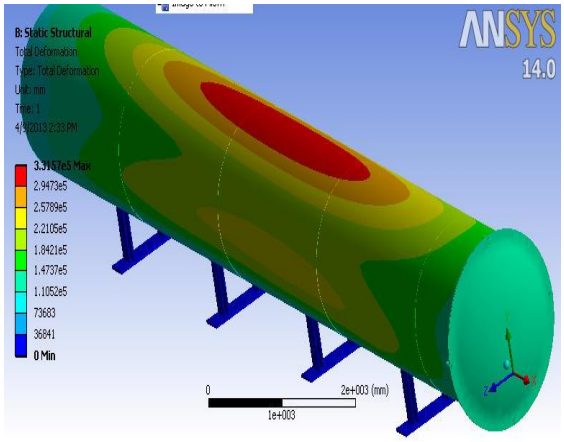

Figure: 4.10 The total deflection of the canister testing chamber for M36 bolt

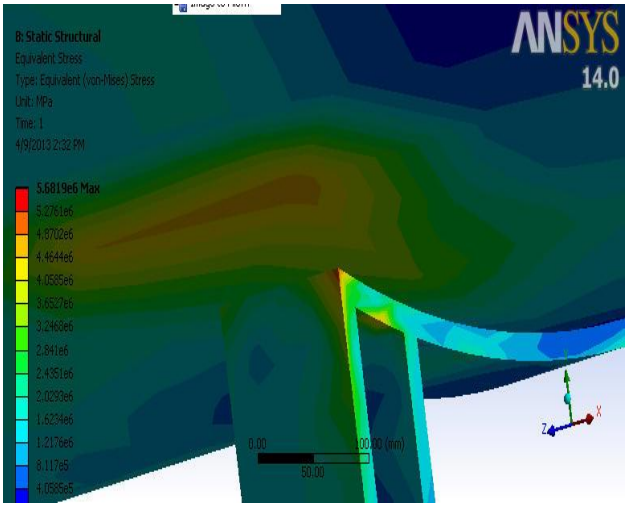

Figure: 4.11 Von-mises stress on the canister chamber for M36 bolt

4.10 Contact gap analysis:

Contact gap analysis is a carried out at the bolting locations of the chamber to check for the leakage of the pressure to the atmosphere. Contact problems are highly nonlinear and require significant computer resources to solve. It is important to understand the physics of the problem and take the time to set up the model to run as efficiently as possible. Contact problems present two significant difficulties. First, we do not know the regions of contact until we've run the problem. Depending on the loads, material, boundary conditions, and other factors, surfaces can come into and go out of contact with each other in a largely unpredictable and abrupt manner. Second, most contact problems need to account for friction. There are several friction laws and models to choose from, and all are nonlinear. Frictional response can be chaotic, making solution convergence difficult.

4.11 General Contact Classifications

Contact problems fall into two general classes: rigid-to-flexible and flexible-to-flexible. In rigid-to-flexible contact problems, one or more of the contacting surfaces are treated as rigid (i.e., it has a much higher stiffness relative to the deformable body it contacts). In general, any time a soft material comes in contact with a hard material, the problem may be assumed to be rigid-to-flexible. Many metal forming problems fall into this category. The other class, flexible-to-flexible, is the more common type. In this case, both (or all) contacting bodies are deformable (i.e., have similar stiffness's). An example of a flexible-to-flexible contact is bolted flanges.

4.12 Bolt preload calculation for M18 Bolts

Bolt pretension, also called preload or prestress, comes from the installation torque T applied while installing the bolt.

The inclined plane of the bolt thread helix converts torque to bolt pretension.

Bolt preload is computed as follows: **Pi = T/ (K D)**

Where P_i = bolt preload (called F_i in Shigley).

T = bolt installation torque. = 10858 N-mm

K = torque coefficient = 0.2

D = bolt nominal shank diameter (i.e., bolt nominal size) = 18 mm

Torque coefficient K is a function of thread geometry, thread coefficient of friction m_c, and collar coefficient of friction m_c.

Delta = P L/ (E A)

P = bolt preload = 4524.1 N

L = bolt length = 50mm

E = bolt modulus of elasticity = 2e5 N/mm^2

A = bolt cross-sectional area = (p/4)*d^2

D = bolt nominal shank diameter = 18 mm

Delta = measured bolt elongation in units of length = 0.01mm

The delta (0.01) calculated is applied as a pretension (initial strain) for the bolts modeled as beams.

4.13 Boundary Conditions:

1. Base plates are constrained in all degrees of freedom
2. Head closure is bolted to chamber using Constraint equations – Simulating bolts
3. Internal pressure of 9 Kg/cm2 is applied
4. Gravity – 9810 mm/sec2 is applied to simulate self-weight.

4.14 3D model of the testing used for contact analysis

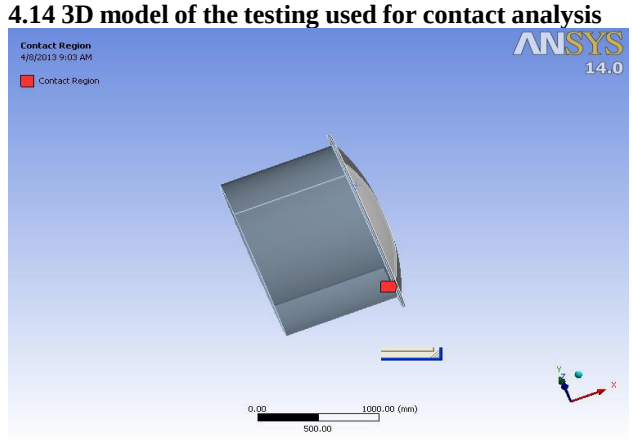

Figure: 4.12 3D Model of the testing chamber used for contact analysis

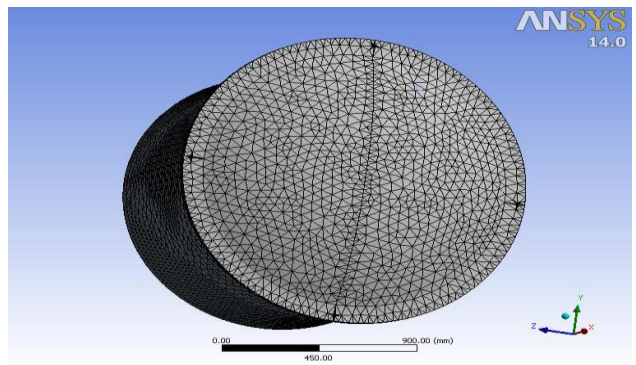

Figure: 4.13 Mesh model of chamber for contact analysis.

4.15 Results of contact gap analysis for M24 bolts

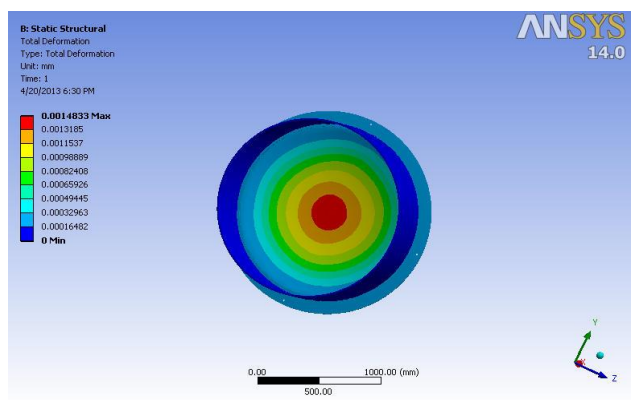

Figure: 4.14 Total deformation for M24 bolts

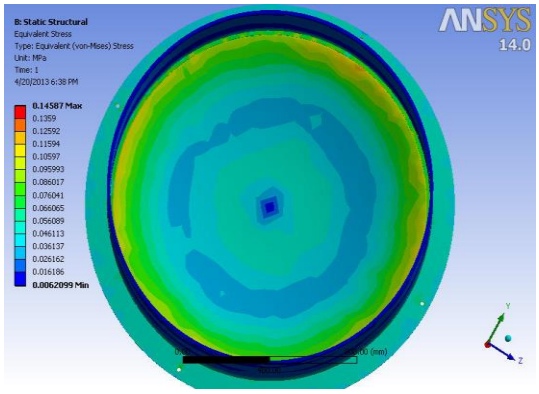

Figure: 4.15 Von-moise stress for M24 bolts

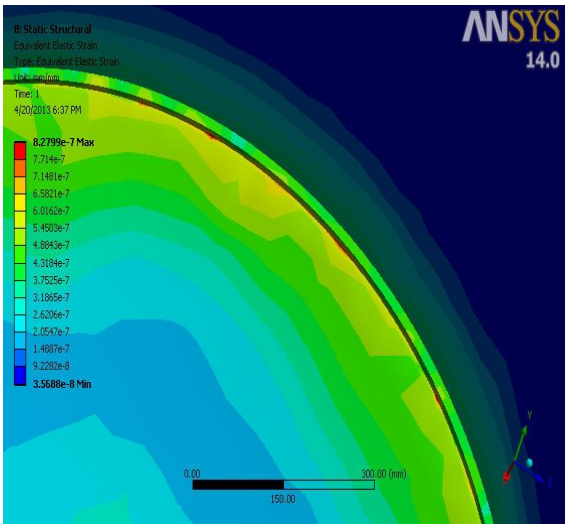

Figure: 4.16 Contact gap for M24 bolts

4.16 Results of contact gap analysis for M30 bolts

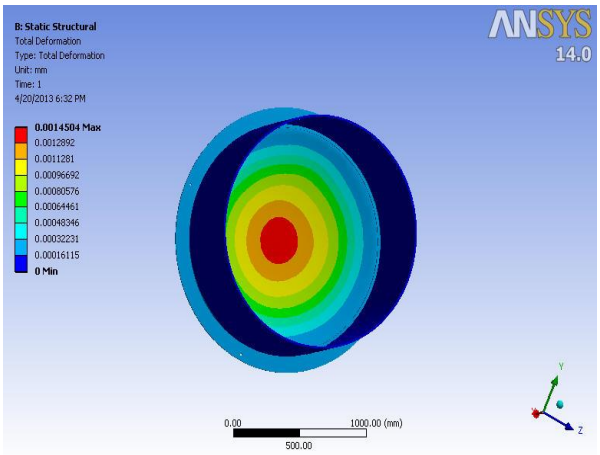

Figure: 4.17 Total deformation for M30 bolts

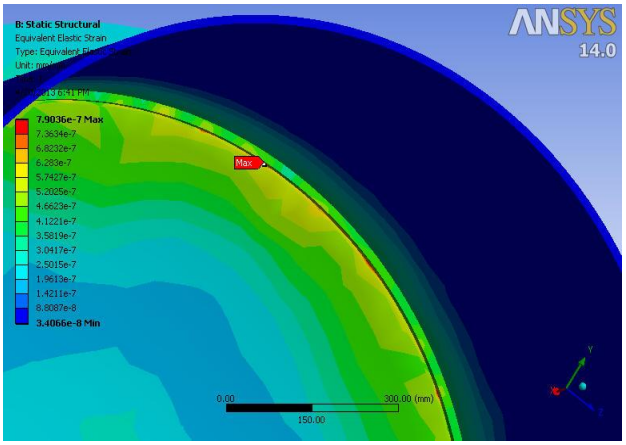

Figure: 4.18 Von-moise stress for M30 bolts

Figure: 4.19 Contact gap for M30 bolts

4.17 Results of contact gap analysis for M36 bolts

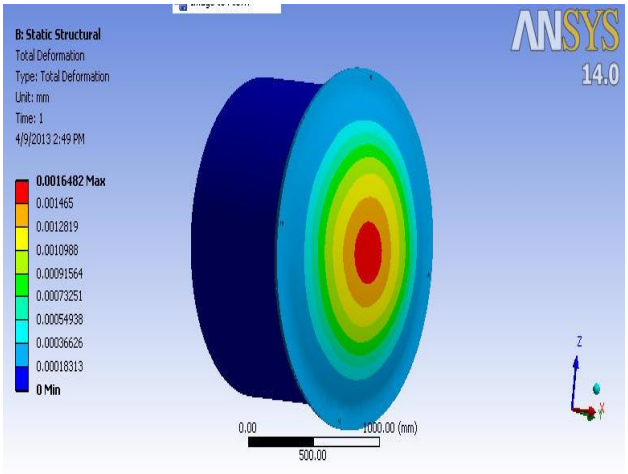

Figure: 4.20 Total deformation for M36 bolts

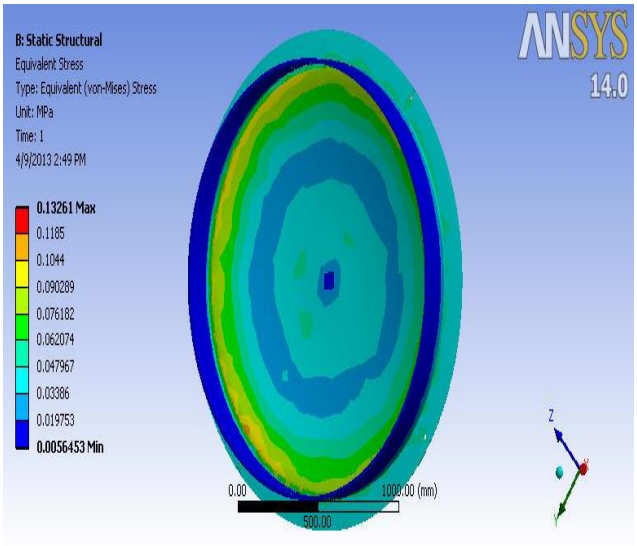

Figure: 4.21 Von-moise stress for M36 bolts

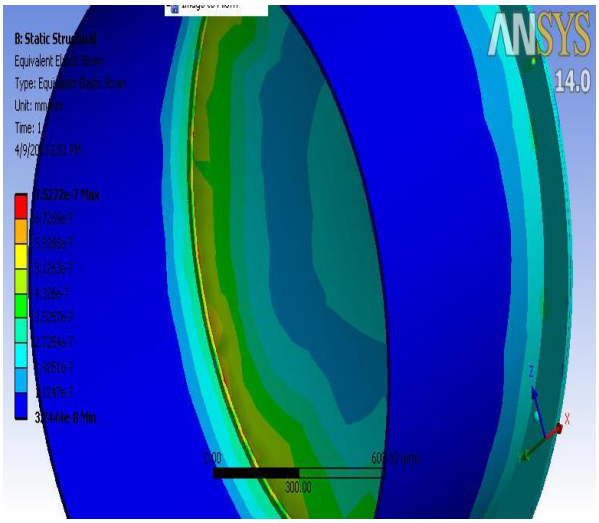

Figure: 4.22 Contact gap for M36 bolts

V. RESULTS AND DISCUSSIONS

5.1 RESULTS

- The maximum von-mises stress observed on canister testing chamber is 56 kg/cm^2.
- The maximum deflection stress observed on canister testing chamber is 3.3 mm.
- Contact gap analysis is done for M24 Bolts and observed the Gap opening of 0.000000827 mm.
- Contact gap analysis is done for M30 Bolts and observed the Gap opening of 0.00000079 mm.
- Contact gap analysis is done for M36 Bolts and observed the Gap opening of 0 mm.

5.2 Result analysis of different types of bolts

The following graphs shows the relation between deflection and bolt sizes Bolt size is taken on X-axis and deflection on Y- axis

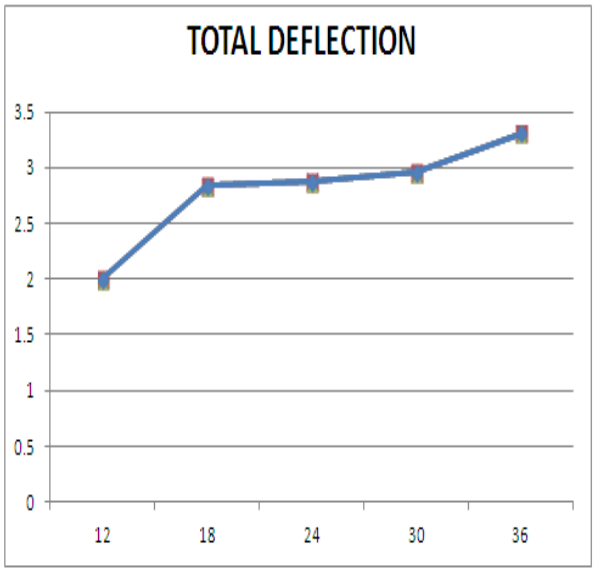

Figure: 5.1 Total deflection graph

From the above figure graph as the diameter of the bolt increases the deflection gradually increases from M24 bolt to M36 bolt size.

The following graphs shows the relation between stress and bolt sizes
Bolt size is taken on X-axis and stress on Y- axis

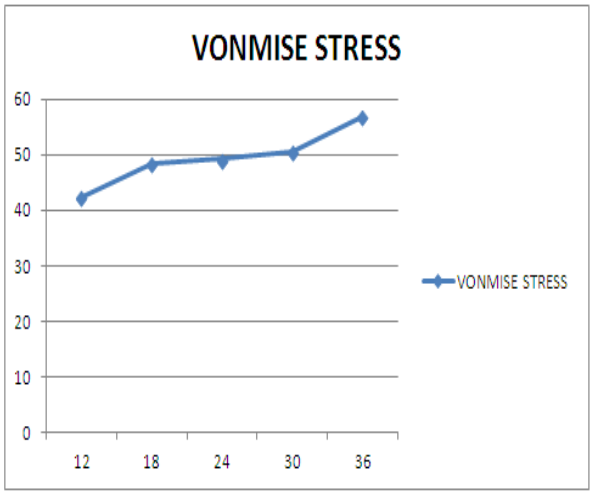

Figure: 5.2 Von-mise stress graph

Table: 5.1 Comparison results analysis of different types of bolts

SL.NO	TYPE OF ANALYSIS	RESULTS OF ANALYSIS		
		SIZE OF BOLTS		
		M24	M30	M36
1	TOTAL DEFOR MATION (mm)	2.88	2.96	3.31
2	VONMISE STRESS(kg/cm2)	49.16	50.48	56.81
3	CONTACT GAP (mm)	0.0000 00827	0.0000 0079	0

From the above figure graph as the diameter of the bolt increases the stress gradually increases from M24 bolt to M36 bolt size.

The following graphs shows the relation between deflection and bolt sizes
Bolt size is taken on X-axis and contact strain on Y- Axis

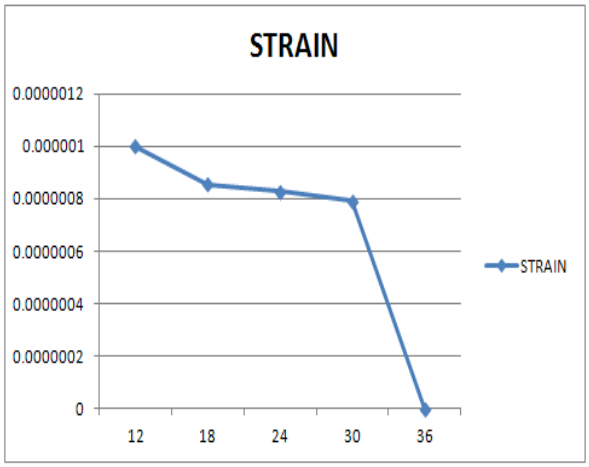

Figure: 5.3 Total Strain graph

From the above figure graph as the diameter of the bolt increases the strain gradually decreases from M24 bolt to M36 bolt size

VI. CONCLUSIONS

Until recently the primary analysis method had been hand calculations and empirical curves. New computer advances have made finite element analysis [FEA] a practical tool in the study of canister testing chambers, especially in determining stresses. In this paper, we have used Ansys software to do the analysis on canister testing chamber. The tasks performed in this dissertation are as follows.

- The maximum von-mises stress observed on the canister testing chamber is 56 kg/cm2
- The maximum deflection observed on the canister testing chamber is 3.3 mm
- From the results, it is concluded that the designed horizontal canister testing chamber is safe for internal pressure.
- Contact gap analysis is done for M36 bolts and observed a gap opening of 0 mm observed.
- From the analysis, it is concluded that M36 bolts are recommended for canister testing chamber to avoid pressure leakage to atmosphere.

REFERENCES

1) **J.H.P. Watson**, "Applied. Physics", Vol 44, pp 4209-4213, 1973.
2) **J.H.P. Watson**, **N.O Clark** and **W. WINDLE**, proc. 11th int. "Min. Process congress" Cagliari, April 1975.
3) **He Ruihan, Lu Hongyu**. "Development of Fuel Evaporative pollutants from Gasoline vehicles trap method device", Automobile technology 1996-23-27.
4) "State environmental protection Administration of china". HJ/T 390-2007"Technical requirement for environmental control system of fuel evaporative Pollutants from vehicle with petrol engine 2007"
5) "Fluent Inc., FLUENT User guide, Fluent Inc… USA, 2003".
6) **C.T Ediquest et al**, "Canister gas dynamics of Gas Generator Launched Missiles", AIAA-80-1186.
7) **"ANSYS** Basic Analysis Procedure Guide, Release 5.3 (1996), Ansys, Houston, Pennsylvania".
8) "Modeling and Meshing Guide Release 5.3(1996) Ansys, Houston".
9) "Structural analysis, Release 5.3. (1996), Ansys, Houston, Pennsylvania".
10) "International Journal of Engineering Research & Technology (IJERT) Vol.1 Issue 7, September–2012 ISSN: 2278-0181 by **L. Srinivas Naik, K. Srinivasa Chalapathy, B. Ravi Kumar.**