International Journal of Advanced Information Science and Technology (IJAIST) ISSN: 2319:2682
Vol.3, No.11, November 2014 DOI:10.15693/ijaist/2014.v3i11.91-95

Design Of Prepaid Energy Meter

Dr.K. Sivasankari.,M.E.,Ph.D
Associate Professor
Department of Electronics and Communication Engineering
Akshaya College of Engineering and Technology

Abstract— **The Electrical Power by paying the amount earlier for some Unit of. Prepaid Energy Meter concept is implemented. Prepaid energy meter are being used worldwide energy to improve the collection of funds for the energy used. In developed nation all electricity boards are facing two major issues is Power Theft and Collection of fund. In the existing system the above two problems are non predictable and time consuming process respectively .To overcome these things in the proposed system Cal cards has developed and implemented as pre-paid energy meter. Cal card take information management to new heights with RFID technology. Using the state of the art technology, we can now write data into the Radio frequency Identifier tag electronically. Using dual Authentication, Stream Encryption and on security features we restrict access to un-authorized personnel for any particular information .In this project three units are important they are RFID Card, RFID Reader and Writer. Tags are programmable and they may be read or read/write the information stored in the tag's memory cannot be changed or can be updated as required. The reader powers the antenna to generate radio frequency waves to transmit a signal that activates the tag and allows data to come into or leave the tag's memory. This card can be designed to hold all amount details including Name of the family**

Index Terms— **Radio Frequency Identfier ,encryption, RFID reader and writer, authentication, Energy meter IC, Microcontroller, LCD, Relay control unit, Smart card.**

I. INTRODUCTION

A scheme of Electricity billing system called "PREPAID ENERGY METER" can facilitate in improved cash flow management in energy utilities and can reduces problem associated with billing consumer living in isolated area and reduces deployment of manpower for taking meter readings. Every consumer can recharge RFID tag assigned and recharge its meter at various ranges (ie. Rs 50, Rs 100, Rs 200 etc).In our project we have given the name for RFID tag card smart card. Consumer can check its balance in LCD attached with the module and be prepare for the next recharge in advance. When a recharge coupon or we can say RFID tag come in front of RFID reader, the reader read the information from its unique RFID Tag and record into database .basically it has three component antenna, transceiver and transponder. So these are components that perform the whole task. when a RFID recharge tag brings near the RFID transceiver it read the code and send it to the microcontroller ,microcontroller checks the code if it is ok then recharge the energy meter if not it display a message of invalid code.

The prepaid energy meter technology is used to that the consumer would receive messages about the consumption of power and recharges the minimum amount If would automatically alert the consumer to recharges. This technology holds good for all electricity distribution companies private communities. It parks and self containing housing projects. The implementation of this paper will help in better energy management conservation of energy and also in doing away with the unnecessary hassles over incorrect billing. The automated billing system will keep track of the real time consumption and will leave little scope for disagreement on consumption and billing.

II. BACKGROUND

The present power usage reading is made manually by moving to the consumer location which is shown in fig.1. This printed billing also has the tendency of getting lost. Over the last few years smart energy meter has been proposed as an innovative solution aimed at facilitating affordability and reducing the cost of utilities. This mechanism, essentially, required the users to pay for the electricity before its consumption.

If the available credit is exhausted then the electricity supply is cutoff by relay and the reading is made by human operator are prove to errors. This project addresses the above mentioned problem. The development of GSM infrastructure in past two decades made meter reading system wireless. The GSM infrastructure which has national wide coverage can be used to request and retrieve power consumption notification over individual houses and flats. Apart from making reading using GSM communication, billing system is needed to be made prepaid energy meter is still controversial on the one hand those that support the diffusion of prepaid meter claim that they benefit both consumers and utilities.

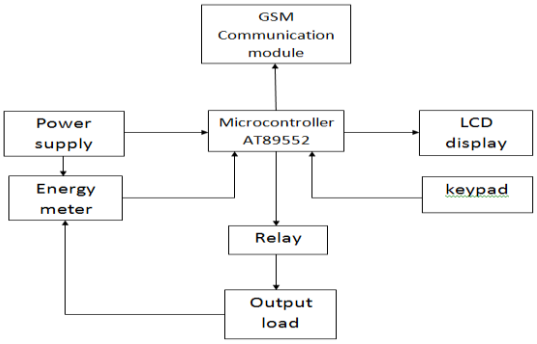

Fig.1. Existing energy meter

III. PREPAID ENERGY METER

The prepaid energy meter is proposed to overcome the disadvantages of the existing system. It consists of RF reader,

microcontroller unit, signal conditioning unit and Driver and relay unit as shown in fig.2.

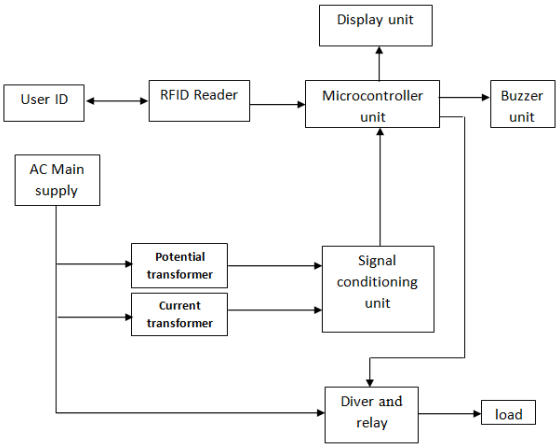

Fig.2. Prepaid energy meter

A. RF READER

Radio-frequency identification (RFID) is an automatic identification method, relying on storing and remotely retrieving data using devices called RFID tags or transponders. The technology requires some extent of cooperation of an RFID reader and an RFID tag. An RFID tag is an object that can be applied to or incorporated into a product, animal, or person for the purpose of identification and tracking using radio waves. Some tags can be read from several meters away and beyond the line of sight of the reader. Most RFID tags contain at least two parts. One is an integrated circuit for storing and processing information, modulating and demodulating a radio-frequency (RF) signal, and other specialized functions. The second is an antenna for receiving and transmitting the signal.

An RFID tag is an object that can be applied to or incorporated into a product, animal, or person for the purpose of identification and tracking using radio waves. Some tags can be read from several meters away and beyond the line of sight of the reader. Most RFID tags contain at least two parts. One is an integrated circuit for storing and processing information, modulating and demodulating a radio-frequency (RF) signal, and other specialized functions. The second is an antenna for receiving and transmitting the signal.

B. Microcontroller unit

The PIC16F887 is one of the latest products from *Microchip*. It features all the components which modern microcontrollers normally have. For its low price, wide range of application, high quality and easy availability, it is an ideal solution in applications such as: the control of different processes in industry, machine control devices, measurement of different values.it hasHigh-performance RISC CPU. Only 35 single word instructions to learn.All single cycle instructions except for program branches which are two cycle.Operating speed: DC - 20 MHz clock input DC - 200 ns instruction cycle.

C. Signal conditioning unit

The signal conditioning unit converts the alternating voltage and current to direct voltage and current through the potential transformer and current transformer and the output is given to the microcontroller unit. Potential Transformer is designed for monitoring single-phase and three-phase power line voltages in power metering applications. 0-9v ac, 10ma.The primary terminals can be connected either in line-to-line or in line-to-neutral configuration.

A Potential Transformer is a special type of transformer that allows meters to take readings from electrical service connections with higher voltage (potential) than the meter is normally capable of handling without at potential transformer which is approximately zero for an appropriate direction of the connections." The voltage transformer has to be as close as possible to the "ideal" transformer. In an "ideal" transformer, the secondary voltage vector is exactly opposite and equal to the primary voltage vector, when multiplied by the turns ratio. In a "practical" transformer, errors are introduced because some current is drawn for the magnetization of the core and because of drops in the primary and secondary windings due to leakage reactance and winding resistance. One can thus talk of a voltage error, which is the amount by which the voltage is less than the applied primary voltage, and the phase error, which is the phase angle by which the reversed secondary voltage vector is displaced from the primary voltage vector.

Current transformers provide insulation against the high voltage of the power circuit, and also supply the relays with quantities proportional to those of the power circuit, but sufficiently reduced in magnitude so that the relays can be made relatively small and inexpensive. The current transformers have several requirements as follows: mechanical construction, type of insulation (dry or liquid), ratio in terms of primary and secondary currents or voltages, continuous thermal rating, short-time thermal and mechanical ratings, insulation class, impulse level, service conditions, accuracy, and connections.

Current transformers measure power flow and provide electrical inputs to power transformers and instruments. Current transformers produce either an alternating current or alternating voltage that is proportional to the measured current. There are two basic types of current transformers: wound and toroidal. Wound current transformers consist of an integral primary winding that is inserted in series with the conductor that carries the measured current. Toroidal or donut-shaped current transformers do not contain a primary winding. Instead, the wire that carries the current is threaded through a window in the toroidal transformer.

A current transformer is an instrument transformer in which the secondary current is substantially proportional to the primary current (under normal conditions of operation) and differs in phase from it by an angle which is approximately zero for an appropriate direction of the connections. The current transformer works on the principle of variable flux. In the "ideal" current transformer, secondary current would be exactly equal (when multiplied by the turns ratio) and opposite to the primary current. Current

transformers measure power flow and provide electrical inputs to power transformers and instruments. Current transformers produce either an alternating current or alternating voltage that is proportional to the measured current.

D. Driver and Relay unit

The driver unit is included which drives the output of the microcontroller to required voltage which is the input to the load.A relay is usually an electromechanical device that is actuated by an electrical current. The current flowing in one circuit causes the opening or closing of another circuit. Relays are like remote control switches and are used in many applications because of their relative simplicity, long life, and proven high reliability. Highly sophisticated relays are utilized to protect electric power systems against trouble and power blackouts as well as to regulate and control the generation and distribution of power.

If the voltage from microcontroller unit is very high such that it may damage the load then the relay in the prepaid energy meter open the path between the relay and driver and the load and hence the load is protected.

E. Working methodology of Prepaid Energy Meter

This System assigns a unique card number for each house. A particular house person places the RFID card within 5cm distance from the RFID Reader. The RFID Reader reads down the time, date and for how much amount it was recharged.The success of recharge will be indicated on the LCD display with buzzer acknowledgement sound.The display also indicates the current energy utilization.

The Interface software is responsible for energy utilization record processing and calculation amount for the utilized energy.

The circuit diagram of energy meter circuit is shown in fig. A 230 V A.C – 12 V D.C step down transformer is used as power supply. The rectifier circuit is used to convert A.C into D.C. at the output of rectifier circuit +12V power supply is generated. The IC 7805 is a voltage regulator which is a 3 pin IC and is used to convert +12V into +5V. Now in our project where we need +5V supply we take it from output of IC7805 and where we required +12V supply we take from the input of IC7805.

When the microcontroller which is a 40 pin IC gets signals first of all we insert the recharge number using the keypad. The recharge unit is stored in IC which is an EEPROM and has volatile memory and this recharge unit is display in Liquid Crystal display and a message “recharge successful” also displays. The IC ULN2003 is a high voltage/ high current Darlington array containing seven open collector Darlington pairs with common emitters used to drive loads. Since the current produced by the microcontroller is only 10 mA which is very low to drive a relay that is why we are using ULN2003[11] which converts 10 mA into 80 mA and the relay is switched ON. As the power is consumed the reading in the single phase energy meter is increased and the units in LCD is decreased by Rs.1.When the balance reaches to Rs.10 then the buzzer starts indicating that we should recharge our meter soon. And if balance is nil then the relay is switched off and no electricity flows.

When the consumer insert a smart card into the card reader which is connected in prepaid energy meter with tariff indicator LCD, then the card reader will read the stored information using the MC program. That smart card cannot be reused by others. Suppose if a consumer buys a card for Rs.50/- he / she can insert this amount through the card reader so that prepaid energy meter with tariff indicator kit will be activated. According to the power consumption the amount will be reduced. When the amount is over, the relay will automatically shutdown the whole system. In our project we also have a provision to display remaining amount so that he can done his recharges on time.

Energy is the measure of how much work has been required over a known period of time. We are using a light bulb as a load with a 100W rating which consumes 100 watts of active power in order to create light (and heat)[2]. First of all a wattmeter is used to measure the power consumed by the load by using the equation. The frequency across 100 W load obtained during an experiment is

$$F = 0.5 \text{ Hz}$$

$$P = 100*X/0.5$$

$$\text{(i.e)} \quad P = 200*X$$

Where X is the frequency of pulses that is produced by the energy meter.

$$1 \text{ watt sec} = 1 \text{ kW sec}/1000$$

$$1 \text{ watt sec} = 1 \text{ kWh}/ (1000*3600)$$

$$\text{Energy} = P * \text{Sec}/ (1000*3600)$$

IV. Results And Implementation

The Energy Meter was tested in the Measurement Laboratories of Rajshahi University of Engineering & Technology, Bangladesh. An Electric Heater of 1.2 kW rating was used as a load that draw currents of up to 5.5 A. The supply voltage was between 210 Vand 230 V. Energy measurement process is described step by step. At first wattmeter was used to measure the power consumed by the load. Then energy consumption was measured after every 20 seconds using the obtained power information from the load. The computed energy consumption is read from the Liquid Crystal Display.

A. Circuit diagram of prepaid energy meter

The fig.3. shows the implementation of prepaid energy meter in which the LCD display and Buzzer are the outputs.

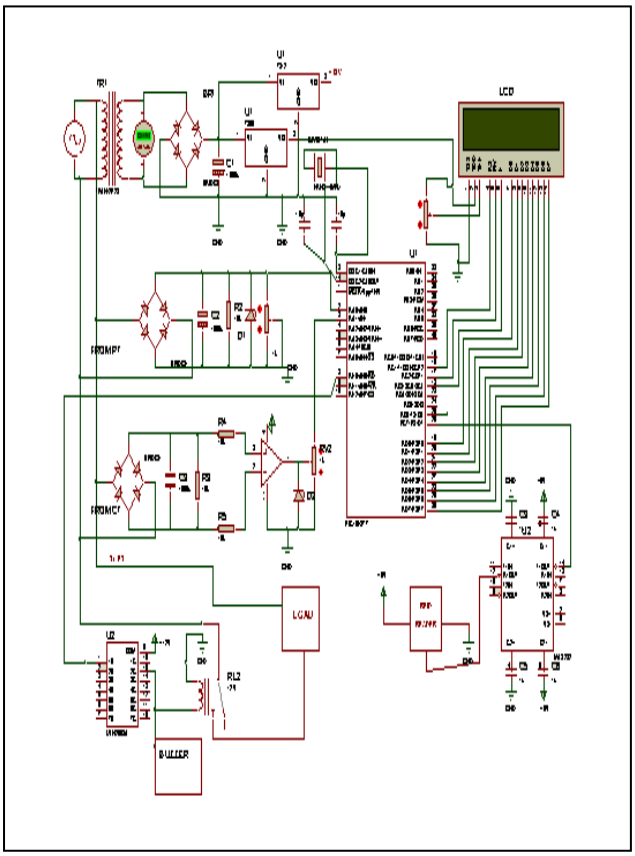

Fig.3. Implementation of the prepaid energy meter

Fig.4. Implementation of the prepaid energy meter using Proteus tool

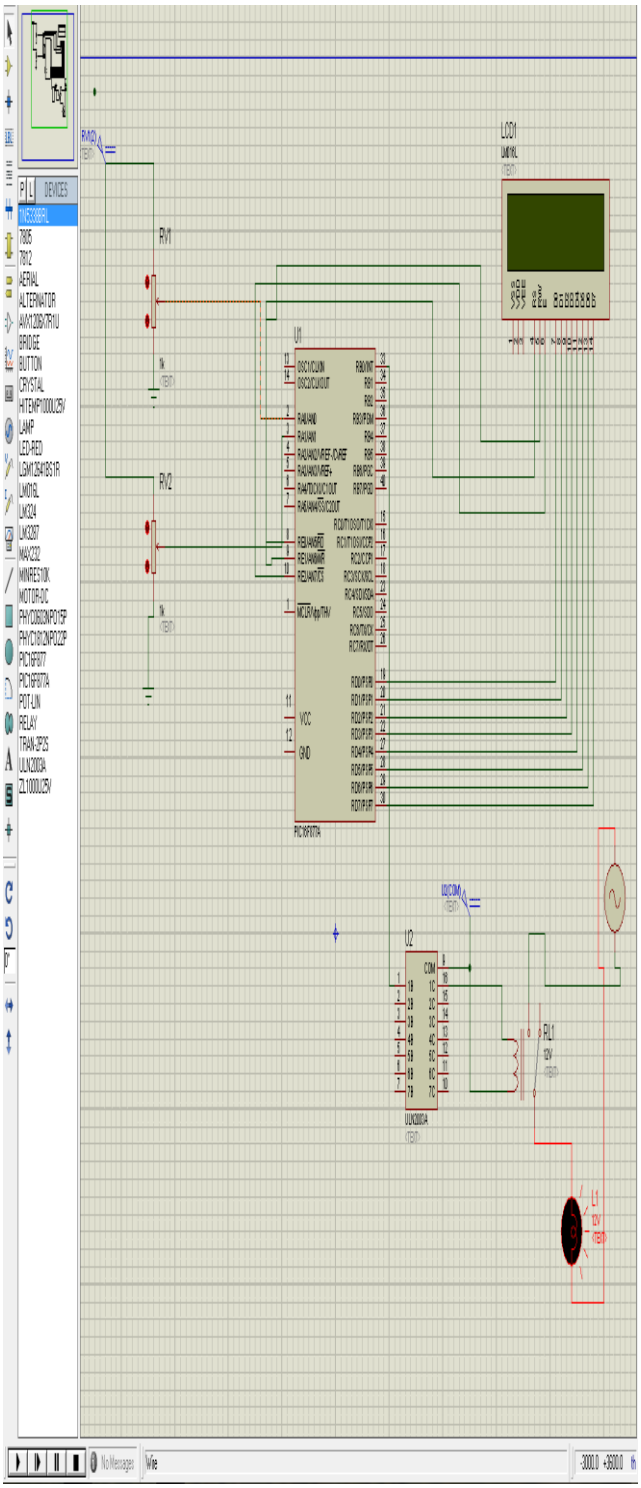

Fig.5. Implementation of the prepaid energy meter

The fig.4. and fig.5. show the simulated result and the hardware implementation. The table I shows the expected and obtained output of the prepaid energy meter.

TABLE I.

Time(sec)	Expected Energy output (kW-sec)	Energy Output from Measurement (kW-sec)	Percentage of Error
0	0	0	Not Applicable
20	24	23	4.17
40	48	47	2.08
60	72	70.6	1.94
80	96	97.5	-1.56
100	120	122	-1.67
120	144	145	-0.69
140	168	168.5	-0.30
160	192	192.3	-0.16
180	216	215.7	-0.14
200	240	240.3	-0.13
220	264	264.1	-0.04
240	288	288.05	-0.02

V. CONCLUSION

The design of smart prepaid energy meter using PIC Microcontroller can make the users to pay for electricity before its consumption. Consumer holds a credit card which has an user id and then use the electricity until the credit is exhausted. If the available credit is exhausted, then the electricity supply is cutoff by a relay.

An arrangement is also made to intimate the user with help of communication module when their credit in their balance goes low. This system has been proposed as an innovative solution to the problem of affordability in utilities system. Since a microcontroller based system is being designed the readings can be continuously recorded. This reduces human labour and at the same time increases the efficiency in calculation of bills for used electricity. Smart energy meter will bring a solution of creating awareness on unnecessary wastage of power and will tend to reduce wastage of power. This module will reduce the burden of energy providing by establishing the connection easily and no theft of power will take place.

REFERENCES

[1] Md. Mejbaul Haque, Md. Kamal Hossain, Md. Mortuza Ali, Md. Rafiqul Islam Sheikh, “Microcontroller Based Single Phase Digital Prepaid Energy Meter for Improved Metering and Billing System”, International Journal of Power Electronics and Drive System (IJPEDS) Vol.1, No.2, pp. 139~147, December 2011.

[2] Devidas, A.R., Ramesh, M.V. “Wireless Smart Grid Design for Monitoring and Optimizing Electric Transmission in India,” 2010 Fourth International Conference on Sensor Technologies and Applications (SENSORCOMM),” pp.637-640,2010.

[3] Shoeb S. Sheikh, et al., “Design and Implementation of Wirele Automatic Meter Reading System," Internationa Journal of Engineering Science and Technology, Vol. 3, No. 3, pp. 2329-2334, March 2011.

[4] Amit Jain and Mohnish Bagree, "A Prepaid Meter Using Mobile Communication,"International Journal of Engineering,Science and Technology, Vol. 3, No. 3, pp. 160-166, Apr 2011.

[5] Kwan, B.H., Moghavvemi, M., “PIC Based Smart Card Prepayment System,” Student Conference on Research and Development, pp. 440- 443, 2002.

[6] Khan R.H., T.F. Aditi, V. Sreeram and H.H.C. lu, “ A Prepaid Smart Metering Scheme Based on WiMAX Prepaid Accounting Model,” Smart Grid and Renewable Energy, Vol. 1, No. 2, pp. 63-69, 2010.

[7] Ling Zou, Sihong Chu and Biao Guo.,“The Design of Prepayment Polyphase Smart Electricity Meter System,” International Conference on Intelligent Computing and Integrated Systems (ICISS), pp. 430-432, 22-24, Dec 2010.

[8] Richa Shrivastava and Nipun Kumar Mishra, "An Embedded System for Wireless Prepaid Billing of Digital Energy Meter," International Journal of Advances in Electronics Engineering, pp. 322-324. Energy Meter in Nigeria,"International Journal of Academic Research , Vol. 3, No. 5, pp. 189-192, Sep 2011.