International Journal of Advanced Information Science and Technology (IJAIST) ISSN: 2319:2682
Vol.4, No.2, February 2015 DOI:10.15693/ijaist/2015.v4i2.311-314

Creating A Virtual Touch Screen Using Mems And Flex Sensors

Nivas.R and Dr. Athisha.G

PG Scholar, Professor& Head.

Department of Electronics and Communication Engineering,

PSNA college of Engineering and Technology,

Dindigul -624619, India.

***ABSTRACT*: The objective of this project is to create an interactive virtual touch screen. The technologies used here are micro-electromechanical- systems (MEMS), Retro touch, Flex sensors, Zigbee network protocol. MEMS is the technology of very small devices which merges at the Nano-scale into Nanoelectromechanical systems (NEMS) and nanotechnology. An accelerometer is used to measure the movement of the hand. Accelerometer is an instrument for measuring acceleration, detecting and measuring vibrations, or for measuring acceleration due to gravity (inclination). They can also be used to measure seismic activity, inclination, machine vibration, dynamic distance and speed with or without the influence of gravity. This is controlled by means of microcontroller. The device is placed in our hands, so that by moving our hand we can control the mouse pointer and clicking options also. This movement control is given to the device or the system in which the applications are to be used. This is done in wireless by means of Zigbee protocol. This protocol device provides various features as the communication distance for Indoor/Urban: up to 133' (40 m), at Outdoor line-of-sight: up to 400' (120 m). This has Transmit Power of 2 mW (+3 dB) and its Receiver Sensitivity is about -95 dBm RF and the transmitting and receiving Data Rate is 250,000 bps**

***KEYWORDS*: Measuring Acceleration, mouse pointer and clicking options, wireless communication, interactive virtual touch screen**

I.INTRODUCTION

MEMS has been identified as one of the most promising technologies for the 21st Century and has the potential to revolutionize both industrial and consumer products by combining Silicon-based microelectronics with micromachining technology. Its techniques and micro system based devices have the potential to dramatically affect of all of our lives and the way we live. Micro sensors and micro actuators are at the very core of a MEMS device or system. A micro sensor detects changes in the system's environment; an 'intelligent' part processes the information detected by the sensor and makes a decision in the form of a signal; and a microactuator acts on this signal to create some form of changes in the environment. Sensors and actuators are broadly termed transducers and are essentially devices that convert onform of energy into another. Many of the MEMS sensors and actuators described have been developed within the microelectronics industry and do not all involve any special micromachining techniques; they are based on conventional integrated circuits that, through inherent mechanisms, sense light, temperature etc.

However, many of these can be enhanced by the use of MEMS. Basic MEMS mechanisms and structures consist of both in-plane and out-of-plane mechanisms as well as structural members to couple energy between the actuator and sensors as well as with the physical interface of a mechanical system. Mechanisms such as joints, linkages, gears and hinges are very typical

II.TECHNOLOGY USED

MEMS ACCELEROMETER: An accelerometer is an instrument for measuring acceleration, detecting and measuring vibrations, or for measuring acceleration due to gravity (inclination). Accelerometers can be used to measure vibration on

vehicles, machines, buildings, process control systems and safety installations. They can also be used to measure seismic activity, inclination, machine vibration, dynamic distance and speed with or without the influence of gravity. The two main directionof accelerations are shown in figure1.

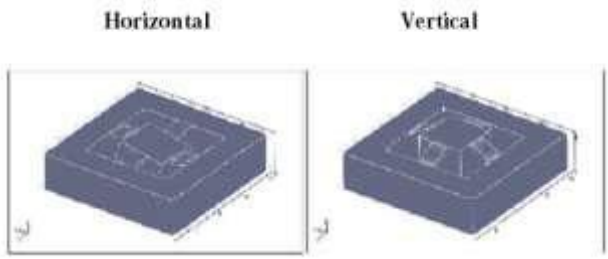

Fig.1 Direction of acceleration

There are many different ways to make an accelerometer. Some accelerometers use the piezoelectric effect they contain microscopic crystal structures that get stressed by accelerative forces, which causes a voltage to be generated. Another way to do it is by sensing changes in capacitance. Capacitors can operate both as sensors and actuators. They have excellent sensitivity and the transduction mechanism is intrinsically insensitive to temperature. Capacitive sensing is independent of the base material and relies on the variation of capacitance when the geometry of a capacitor is changing.

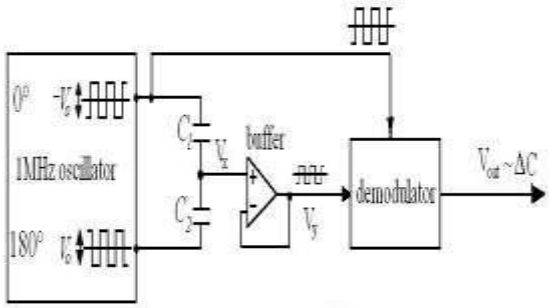

Fig.2 Electric circuit of measurement of acceleration

A Fig.2 is an electric circuit that measures acceleration through capacitor changes. If acceleration is zero, voltage output is also zero. When acceleration isn't zero, we get with the voltage follower square wave with the right amplitude and after demodulator voltage output Vout with the right amplitude and the right sign.

FABRICATION OF MEMS: Micro-fabrication is the set of technologies used to manufacture structures with micrometric features. This task can unfortunately not rely on the traditional fabrication techniques such as milling, drilling, turning, forging and casting because of the scale. The fabrication techniques had thus to come from another source.
As MEMS devices have about the same feature size as integrated circuits (IC), MEMS fabrication technology quickly took inspiration from microelectronics. Techniques like photolithography, thin film deposition by chemical vapor deposition (CVD) or physical vapor deposition (PVD), thin film growth by oxidation and epitaxy, doping by ion implantation or diffusion, wet etching, dry etching, etc have all been adopted by the MEMS technologists. Moreover, MEMS also grounded many unique fabrication techniques that we will describe in this seminar like bulk micromachining, surface micromachining, deep reactive ion etching (DRIE).

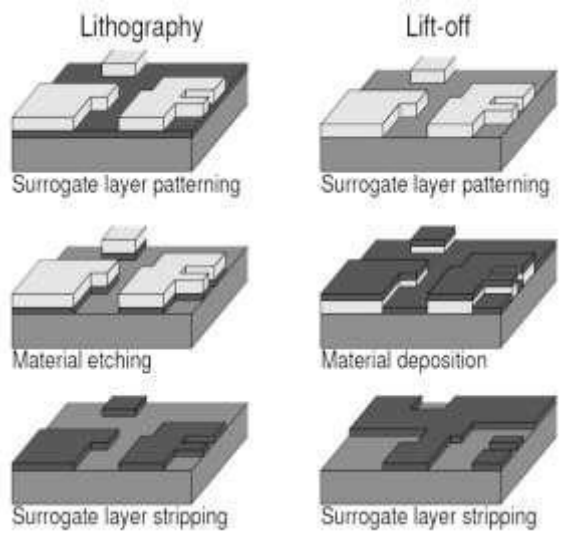

Fig3. Fabrication of MEMS

TYPES OF ACCELEROMETER

The two kinds of basic accelerometers are:

ANALOG ACCELEROMETER

At times Inputs and output readings also matter especially when it comes to determining the kind of accelerometer that needs to be placed on a certain object. If the output is digital then a digital

accelerometer must be placed and vice versa. The main feature of this accelerometer is that the output tends to change when there is even a slight change in the input. The most common type of this accelerometer is used in airbags of automobiles, to note the sudden drop in the speed of the vehicle and to trigger the airbag release. Even laptops are now being equipped with accelerometers in order to protect the hard drive against any physical dangers, caused mainly due to accidental drops.

DIGITAL ACCELEROMETER

The digital accelerometer is more sophisticated than the analog. Here the amount of high voltage time is proportional to the acceleration. One of its major advantages is that it is more stable and produces a direct output signal. Accelerometers are now also used in aerospace and many military applications, such as missile launch, weapon fire system, rocket deployment etc. Many a times these accelerometers are used to protect fragile equipment during cargo transportation, and report any strain that might cause a possible damage. Some companies have also managed to develop a wireless 3-axis accelerometers which are not only low in cost but are also shock durable. This 3-axis accelerometer has sensors that are used to protect mobiles and music players. Also these sensors are used in some of the devices used for traffic navigation and control.

III.PROPOSED SYSTEM

The entire circuit is to be designed in the following way as an embedded system of approach.The accelerometer measures the angle of movement and this measurement is conditioned. Then this signal is given to an Microcontroller for further process. In the microcontroller programs are burned as per the requirement of the user.Flex sensors are used to create an interacting options. Here they are used for clicking, dragging, and other purposes as per the requirements. For each signal from the flex sensors, different actions are given. For example consider there are five sensors placed as in our hand.

The basic flex sensor circuit is given below. The circuit is nothing but a voltage divider which continuously produces output. The output will vary if there is any change or if the sensor is bent.

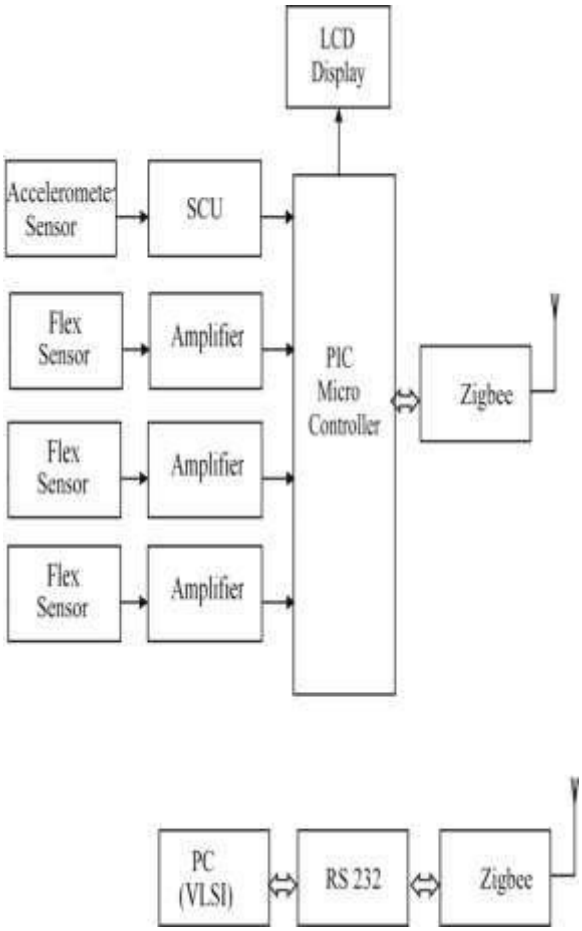

Fig.4 Block Diagram of Proposed System

Now the thumb is programmed to open a new folder, fore finger is used to copy, Middle finger to paste, ring finger is to open a folder, little finger to refresh the page. Likewise for both hand can be done. The actions are been programmed in the Microcontroller. The appearance of an established flex sensor circuit is given below.

Fig.5 Flex sensor gloves

The basic flex sensor circuit is given below. The circuit is nothing but a voltage divider which continuously produces output. The output will vary if there is any change or if the sensor is bent.

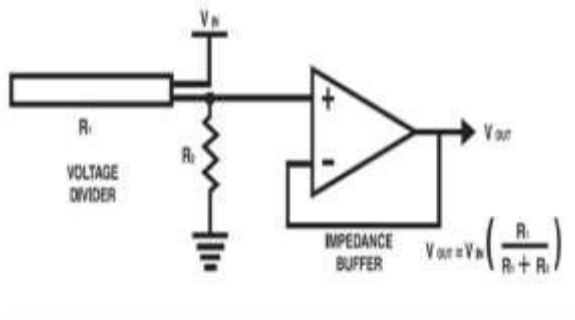

Fig.6 Basic operation of flex sensors

The amount of bend in the sensor produces corresponding output voltage. The resistance in the sensor varies as the sensor is bent. So this creates a voltage difference and an there will be a change in the output. This output is fed to the microcontroller for which the corresponding action are been programmed. So the corresponding action will be done creating an interaction with the application to be used.

COMPLETED WORK

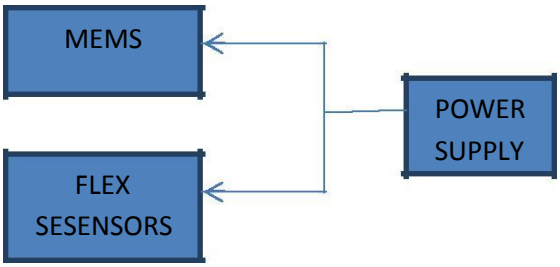

Power supply for the mems accelerometer and flex sensors is 5v dc.

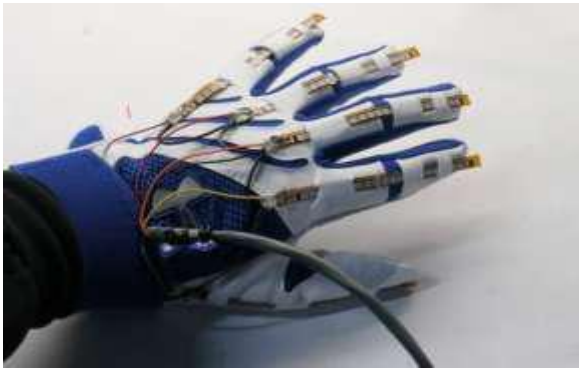

Fig.5 Flex sensor gloves

Above shown diagram flex sensors and mems accelerometer to be placed in our hands.

V.CONCLUSION& FUTURE WORK

The proposed idea will provide an interactive virtual environment which reduces the other condition and impossibilities. The proposed system based on the microcontroller is found to be more compact, user friendly and less complex, which can readily be used in order to perform. Several tedious and repetitive tasks. Though it is designed keeping in mind about the need for industry, it can extended for other purposes such as commercial & research applications.

In future, microcontroller and zigbee will be implemented for complete the all kind of work in this project.

REFERENCES:

1. W. Davis et al., “MEMS-Based Pico Projector Display”, Proceedings of IEEE/LEOS Optical MEMS &Nanophotonics, Freiburg, Germany, 2008.
2. R. Stevenson, “A Dark-Horse Green Laser Shines”, IEEE Spectrum, August 2010.
3. R. Sprague et al., “Mobile Projectors Using Scanned beam Displays”, from Mobile Displays, Technology and Applications, Bhowmik, Li, and Bos editors, John Wiley and Sons, Chapter 21, 2008.
4. F. Chollet, H. Liu, A (not so) short introduction to MEMS February 2008
5. S. Beeby, G. Ensell, M. Kraft, N.White, MEMS mechanical sensors (Artech house inc.,USA, 2004)
6. S. E. Lyshevski, Mems and Nems: systems, devices and structures (CRC Press LLC, USA,2002)

7. David Rozado “Mouse and Keyboard Cursor Warping to Accelerate and
Reduce the Effort of Routine HCI Input Tasks”ieee transactions on human-machine systems, vol. 43, no. 5,september 2013.

8. ChangpingLuo and K. W. Goossen“Free-Space Optical Link by Microelectromechanical
System Array and Corner Cube Reflector” ieee photonics technology letters, vol. 17, no. 6, june 2005.
9. D. Pedersen and O. Solgaard, “Free space communication link using a grating light modulator,” *Sens. Actuators A, Phys.*, vol. A83, no. 1–3, pp. 6–10, May 22, 2000.

UtkuBaran, Dean Brown, Sven Holmstrom, DavideBalma,Wyatt O. Davis, Paul Muralt and Hakan Urey,”Resonant PZT MEMS Scanner for High-Resolution Displays”journal of microelectromechanical systems, vol. 21, no. 6, december 2012
10.